ESDEC

INNOVATIVE **MOUNTING SYSTEMS**

FLATFIX FUSION

MANUAL

EN

FLATFIX FUSION MOUNTING SYSTEM FOR FLAT ROOFS

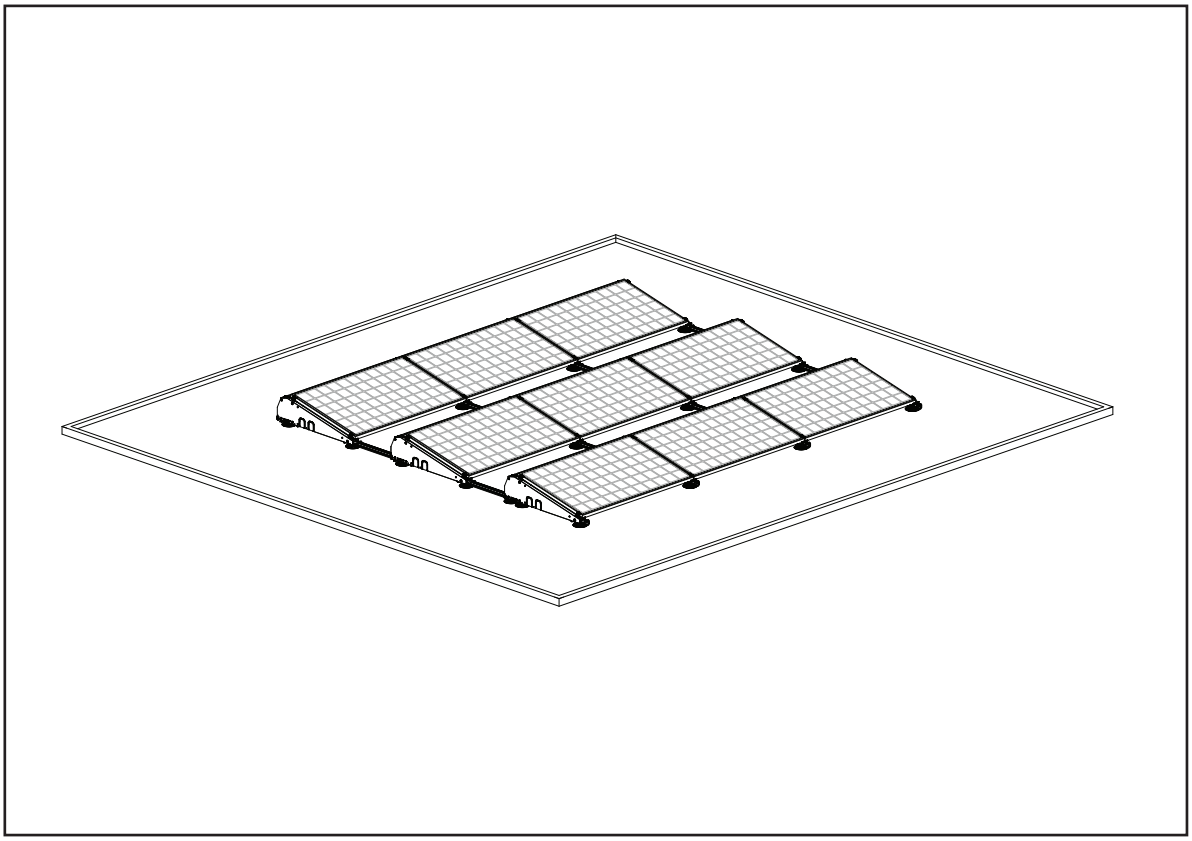

FlatFix Fusion mounting system for flat roofs for solar panels in a single landscape setup

Rev. 18.04.23

© ESDEC BV 2023

ESDEC
Londenstraat 16
7418 EE Deventer
The Netherlands

T +31 850 702 000
info@esdec.com
www.esdec.com

IBAN NL64 INGB 0658539531
BIC INGBNL2A
VAT NL813998955B01

CLICKFIT FLATFIX

All our transactions and sales apply our Terms and Conditions which are filed with the Chamber of Commerce (08127728). These can be downloaded at www.esdec.com

CONTENTS

	page
1. Introduction	**1**
2. General installation requirements	**1**
3. Product description	**3**
4. Parts overview	**3**
4.1 Exploded-view	3
4.2 List of parts	4
5. Preparation for installation	**5**
5.1 Checking if you have all necessary tools and accessories	5
5.2 Determining and measuring the position of solar panels	6
5.3 Cleaning the roof	6
6. Installation	**7**
6.1 Mounting roof support to bases	7
6.2 Mounting additional roof supports (optional)	7
6.3 Mounting TPO Protective Mat (optional)	7
6.4 Equipotential bonding and mounting base profile to bases	8
6.5 Coupling FlatFix Fusion segments	9
6.6 Positioning FlatFix Fusion segments	10
6.7 Mounting ballast containers	10
6.8 Installing 1st solar panel	12
6.9 Equipotential bonding and installing other solar panels	13
6.10 Mounting optimisers & cables	14
6.11 Equipotential bonding multiple rows (option, see also section 7.3)	15
6.12 Equipotential bonding ballast containers (option)	16
6.13 Locating ballast	17
6.14 Mounting and equipotential bonding wind deflector back	18
6.15 Equipotential bonding touchable metal parts (optional)	20
6.16 Mounting wind deflector left/right	21
7. Annex	**22**
7.1 Dimensional variants	22
7.2 Installing cable exit guides, cables and wind deflectors	25
7.3 Schematic representation of earthing, equipotential bonding and lightning protection	27
7.4 Ballast configurations	30

THIS INSTALLATION MANUAL MUST BE KEPT IN A SAFE PLACE FOR FUTURE USE!

For the duration and conditions of the warranty, we recommend you to contact your supplier.

We refer to our General Terms and Conditions of Sale and Delivery, which are available on request.

The manufacturer declines all responsibility for damage or injury resulting from failure to follow this installation manual carefully or failure to exercise the usual care when transporting, mounting and using the FlatFix Fusion mounting system.

Due to ongoing improvements, the product may differ in detail from what is described in this manual. This means that the instructions given are only intended as a guide for the installation of the product referred to in this manual.

This manual has been compiled with the greatest possible care, but the manufacturer cannot accept liability for any errors in this manual or their consequences.

In addition, all rights are reserved and no part of this manual may be reproduced in any form whatsoever.

1. Introduction

7KLV PDQXDO GHVFULEHV WKH LQVWDOODWLRQ RI WKH)ODW)L[ )XVLRQ PRXQWLQJ
Read the manual carefully so that you are completely familiarised with the contents of the manual. Follow the instructions in the manual carefully. Always perform the actions in the correct order.
Keep the manual in a safe and dry place. If the manual is lost, it is possible to order a new copy from Esdec BV or to download it at www.esdec.com. Where reference is made to the installation drawing, reference is also made to the FlatFix Calculator from which the installation drawing can be generated.

2. General installation conditions

General

Failure to comply with the instructions in this document and/or in the installation drawing may invalidate all warranty and product liability claims.
7KH VSHFL¨FDWLRQV FRPPHQWV DQG UHFRPPHQGDWLRQV FRQWDLQHG LQ WKLV G
are complete and up-to-date. Esdec BV reserves the right to change this document without notice.

Stability and condition of the roof

The roof must be in a good condition and strong enough to support the weight of the solar panels, including additional materials, ballast, wind and snow loads. Check the stability of the roof and adjust the roof/structure if necessary. If in doubt, consult a structural engineer. Ensure that the load threshold of the roof is not exceeded, either locally or in total.

Insulation/roofing

7KH FRQWLQXRXV FRPSUHVVLYH ORDG FDSDFLW\ SRLQW ORDG RI WKH LQVXODWL
EHIRUH LQVWDOODWLRQ 7KH VXLWDELOLW\ RI WKH URRI VXSSRUWV LQ FRPELQDW
order; if required or desired, place additional roof supports where necessary. If in doubt, consult a professional roofer.

Safety warnings

- The installation of the FlatFix Fusion PRXQWLQJ V\VWHP PXVW EH FDUULHG RXW DV VWDQGDUG OHDVW VNLOOHG SHUVRQV
- The addition or omission of components may adversely affect function and is strongly discouraged!
- %HIRUH LQVWDOOLQJ WKH VRODU SDQHOV WKH URRI PXVW EH FOHDQ GU\ ©D
- Avoid installation in strong winds and on a wet and slippery roof surface.
- The FlatFix Fusion mounting system may only be installed at temperatures between -15ºC and 40º, due to mounting connections of the plastic parts.
- Always work on the roof with fall protection and, if necessary, with safety nets and edge protection.
- :HDU VKRHV ZLWK D UHLQIRUFHG WRH DQG ¨UP QRQ VOLS VROHV
- Always wear suitable protective clothing when performing work.
- :KHQ PRYLQJ WKH PDWHULDO VRODU SDQHOV HWF DOZD\V XVH D KRLVW OLI
- Always place ladders on a strong, stable surface.
- Always place the ladder at an angle of about 75º and make sure that it projects about 1 metre above the roof edge.
- If possible, secure the ladder at the top with a rope or strap.
- Preferably work according to the manual “Safe Working on Roofs”.

Range of application of FlatFix Fusion

- Installation temperature range: -15°C - +40°C.
- :LQG]RQH WR ZLWK WKH H[FHSWLRQ RI WKH FRDVWDO]RQH
- 5RRI KHLJKW P ,I \RXU URRI LV KLJKHU \RX VKRXOG FRQWDFW \RXU VXSSO
- 7\SH RI URR¨QJ &RQFUHWH %LWXPHQ (3'0 39& 732
- 5RRI SLWFK PD[LPXP | 7KH EDVH SODWHV PXVW EH JOXHG EHWZHHQ | DQG |
- With a roof pitch of more than 7º, you should contact your supplier.
- Setup: Landscape array. Inclination angle of solar panels: 11,3º to 13º.
- Maximum solar panel dimensions: length 1550 – 1690 mm, 1655 mm – 1795 mm, 1830 – 1970 mm, 1940 – 2080 mm, 2050 – 2190 mm. Width 980 – 1016 mm, 1017 – 1053 mm, 1068 – 1104 mm, 1114 – 1150 mm, thickness 30 – 50 mm. VHH WDEOH RQ SDJH

Table range panel dimensions

Panel length range

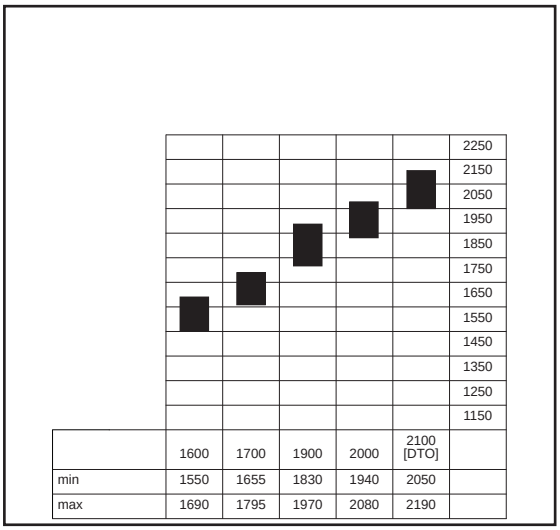

	1600	1700	1900	2000	2100 [DTO]	
min	1550	1655	1830	1940	2050	
max	1690	1795	1970	2080	2190	

Panel width range

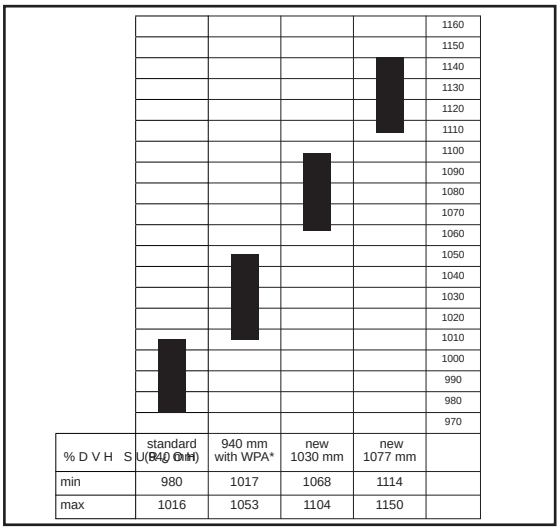

% D V H S U (R 0 mm)	standard (940 mm)	940 mm with WPA*	new 1030 mm	new 1077 mm	
min	980	1017	1068	1114	
max	1016	1053	1104	1150	

*WPA = Wider Panel Adapter = 1007022-WP

Edge zone

The distance from the solar panels to the edge of the roof must be approximately 1/5 of the height of the building with a minimum distance of 30 cm, due to the very turbulent wind currents in this zone. No solar panels must be installed in this zone, either in whole or in part. The edge zone to be maintained is derived from the FlatFix Fusion calculator.

Ballast

If your roof is higher than 20 metres, we recommend that you consult with your supplier to help determine the correct ballast. Use stones or gravel as ballast. Consult the installation drawing.

Standards, regulations and rules

When installing the mounting system, it is important to follow the installation manual and related standards to prevent accidents. In particular, observe the following standards, regulations and rules:

- %XLOGLQJV 'HFUHH UHJXODWLRQV IRU WKH FRQVWUXFWLRQ XVH DQG GHP
- NEN 7250:2014 — Structural aspects of solar power systems
- NEN-EN 1990 — Basis of structural design
- NEN-EN 1991-1-3 — General loads - snow load
- NEN-EN 1991-1-4 — General loads - wind pressure
- 1(1 (OHFWULFDO LQVWDOODWLRQV IRU ORZ YROWDJH +' ,(&
- NEN-EN-IEC 62305 — Lightning protection
- Workplace safety laws and regulations — Safe working and working conditions
- NEN 3140 — Safe operation of low-voltage installations
- 9&$ FKHFNOLVW 6DIH ZRUNLQJ RQ WKH ZRUN ©RRU
- Scaffolding & Volandis directive safety — A-sheet ladders/scaffolding

Removal and disassembly

Dispose of the product in accordance with local laws and regulations. At the end of the service life, all materials are recyclable.
7KH DOXPLQLXP EDVH SUR¨OHV DUH DWWDFKHG WR WKH EDVHV E\ PHDQV RI D FOL
SUR¨OH

Warranty

Warranty according to the Esdec BV warranty terms. These can be found on the website www.esdec.com.

Liability

7KH PDQXIDFWXUHU DFFHSWV QR OLDELOLW\ IRU GDPDJH RU LQMXU\ FDXVHG E\ ID
instructions in this manual, or by negligence during installation of the product and the accessories listed in this document.
v SULQWLQJ HUURUV UHVHUYHG

3. Product description

The mounting system is made up of high-quality plastic bases, which are connected to each other in the longitudinal GLUHFWLRQ ZLWK DOXPLQLXP EDVH SUR¨OHV ,Q WKH ODWHUDO GLUHFWL RWKHU ZLWK ZLQG GH©HFWRUV 7KH QHFHVVDU\ PRXQWLQJ PDWHULDOV D ODQGVFDSH VHWXS RQ WKH URRI 7KH)ODW)L[ )XVLRQ PRXQWLQJ V\VWHP

Placing ballast

7KH)ODW)L[ )XVLRQ V\VWHP LV QRW QRUPDOO\ ¨[HG WR WKH URRI EXW V r r IRU 39& WKH URRI VXSSRUWV KDYH WR EH ERQGHG WR WKH URRI 3 sealant and the roof covering in order to ensure these are compatible. The system is made resistant to the wind by ZHLJKLQJ LW GRZQ ZLWK EDOODVW 7KH EDOODVW ZHLJKW LV SDUWO\ UH the system. Place the ballast in the ballast containers. Consult the installation drawing for the positioning and quantity of ballast.

Fixing the solar panels

The solar panels are positioned on the top of the bases and are secured by means of universal module clamps, end clamps and mounting screws. The mounting screws are screwed directly into the mounting holes of the bases. The WLJKWHQLQJ WRUTXH RI WKH PRXQWLQJ VFUHZV LV VSHFL¨HG LQ PRUH G

4. Parts overview

4.1 Exploded-view

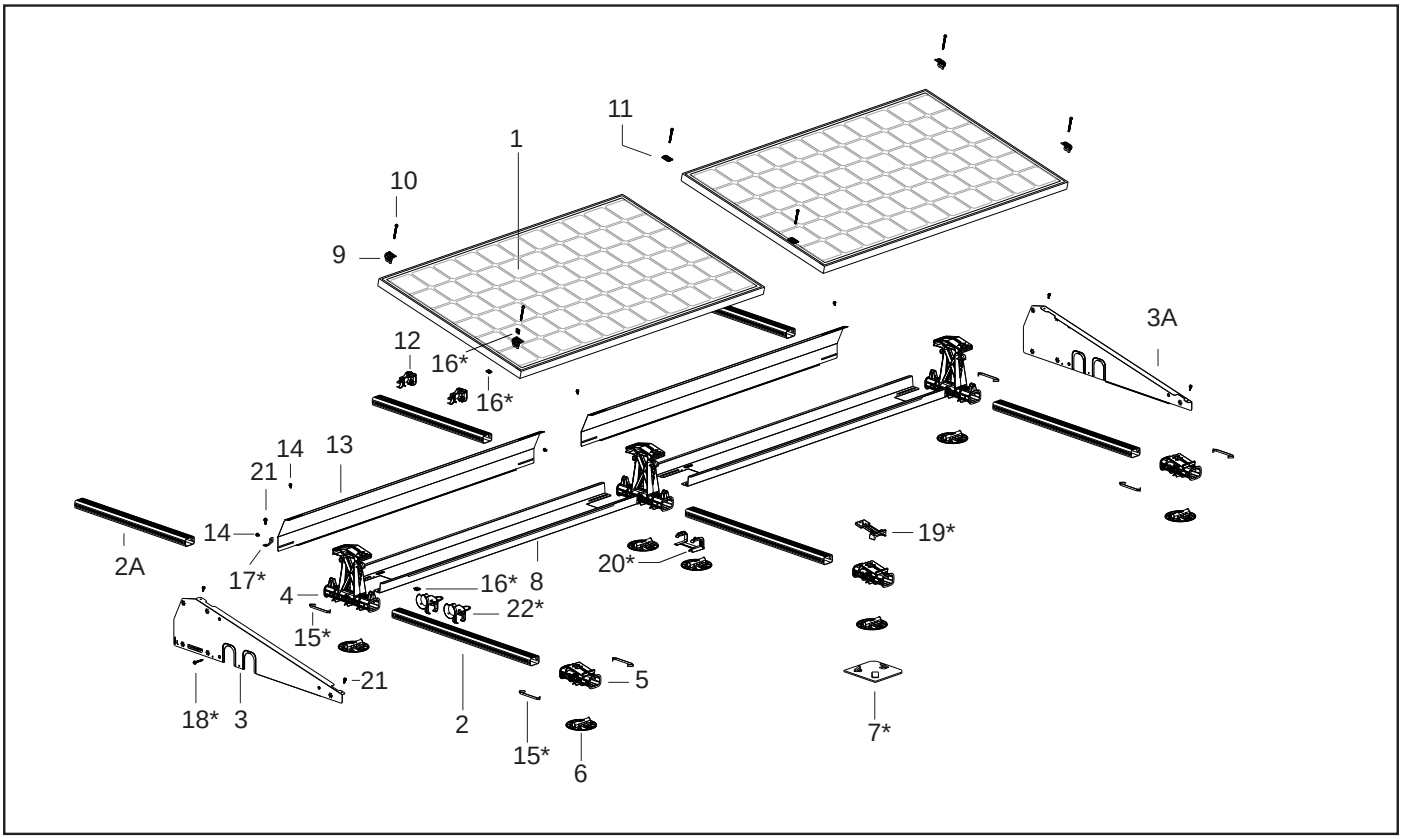

4.2 List of parts

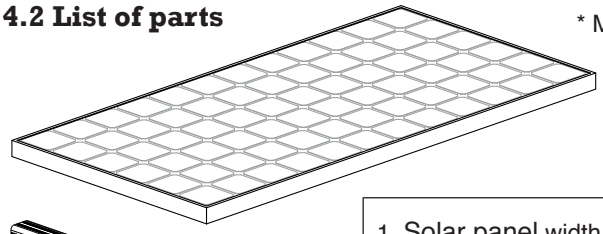

* Measure the shortest side of the solar panel and select the base
S U R ¨ O H D Q G W K H P D W F K L Q J Z L Q G G H © H F W R U V

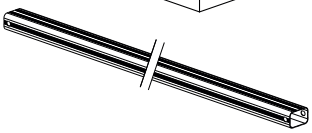

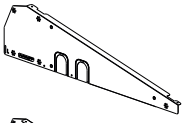

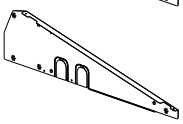

1. Solar panel width:	*1016 – 1053 mm	*1068 – 1104 mm	*1114 – 1150 mm
2. % D V H S U R ¨ O H Article no.:	940 mm 1007194	1030 mm 1007195	1077 mm 1007196
: L Q G G H © H F W R U O H I W D O V R D Y D L O D E O H L Q E O D F N Article no.:	%	%	%
$: L Q G G H © H F W R U U L J K W D O V R D Y D L O D E O H L Q E O D F N Article no.:	%	%	%

Then select the other parts below.

$ % D V H S U R ¨ O H
Article no.: 10071__
For length see annex section 7.1

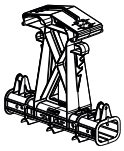

4. High base
Article no.: 1007031

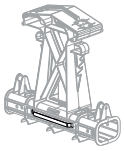

4A. High base
with equipotential bonding
Article no.: 1007031-S

5. Low base
Article no.: 1007022

5A. Low base
with equipotential bonding
Article no.: 1007022-S

6. Roof support
Article no.: 1007012

7. TPO protective mat
Article no.: 1007015
*optional

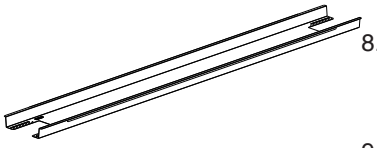

8. Ballast container
Article no.: 10072__
For length see annex section 7.1

9. End clamp
Article no.: 1004__
For type see annex section 7.1

10. Mounting screw M6 x __
$ U W L F O H Q R B B %
For type see annex section 7.1

11. Universal module clamp
$ U W L F O H Q R %

12. Cable-clip optimiser ready
Article no.: 1007041

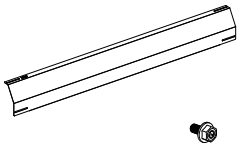

: L Q G G H © H F W R U E D F N
Article no.: 10072__
For length see annex section 7.1

14. Mounting screw M6x12
$ U W L F O H Q R %

15. Grounding spring
Article no.: 1007502
*optional
Available pre-assembled:
Article no.: 1007022-S
Article no.: 1007031-S

16. Grounding clamp
Article no.: 1007505
*optional

17. Grounding bracket
Article no.: 1007503
*optional

18. Self-drilling screw 6.3x42mm
SW10/T30
Article no.: 1003016
*optional

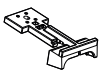

19. Low base extension
Article no.: 1007022-WP
*optional and only in combination
Z L W K E D V H S U R ¨ O H R I

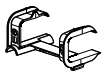

20. Roof support adapter
Article no.: 1007011
*optional

21. Self-tapping sheet metal screw
6,0 x 25 SW10 HEX/T30
Article no.: 1008085

22. Cable exit guide
Article no.: 1005570
*optional

5. Preparation for installation

5.1 Checking if you have all necessary tools and accessories

Here is a list of the necessary tools/aids:

Tape measure

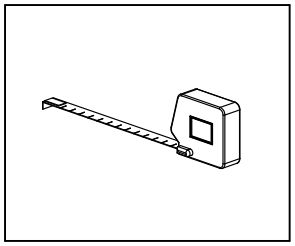

Broom

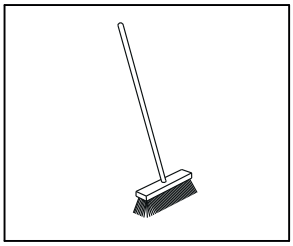

Hexagon socket ratchet

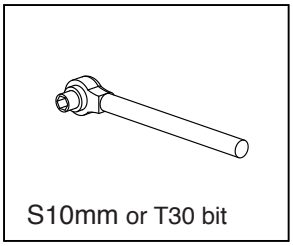

or

Cordless drill machine

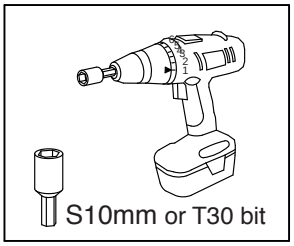

Marker/chalk

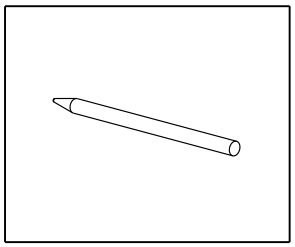

Mastic gun optional
For roof slope > 2º/3º

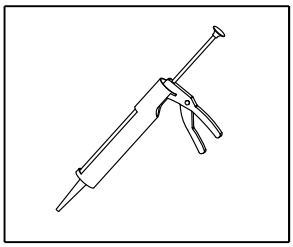

Adjustable pliers

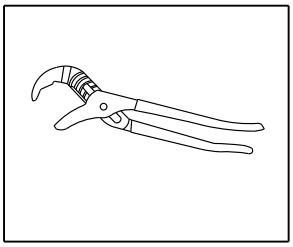

Grinder
For any shortening of the
S U R ¨ O H V

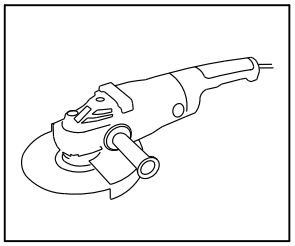

Safety helmet

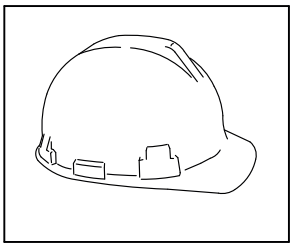

Safety shoes

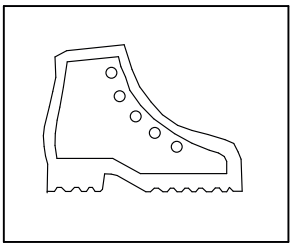

Dust cap

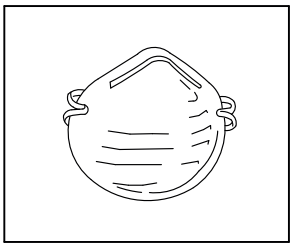

Safety gloves

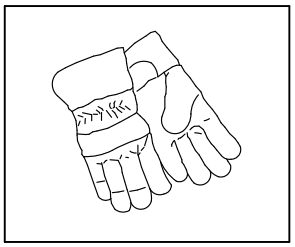

5.2 Determining and measuring the position of solar panels

:KHQ GHWHUPLQLQJ WKH SRVLWLRQ RI WKH VRODU SDQHOV RQ WKH ©DW
of sunlight both throughout the day and throughout the year. Place the solar panels on a roof surface that does not stand in shadow. Shading from a chimney, trees and nearby buildings has a negative effect on the yield of the solar panels.

Measuring and marking out

7R SODFH WKH VRODU SDQHO LQ ODQGVFDSH VHWXS \RX QHHG DSSUR[LF
panel.
If several rows of solar panels are installed in succession, an intermediate distance must be maintained due to shading. The distance from the solar panels to the edge of the roof must be approximately 1/5 of the height of the building with a minimum distance of 30 cm, due to the very turbulent wind currents in this zone VHH LQVWDOODW
GUDZLQJ IRU WKH FRUUHFW VSDFLQJ
0DUN WKH RXWOLQH RI WKH SDQHO ¨HOG RQ WKH URRI ZLWK FKDON RU D

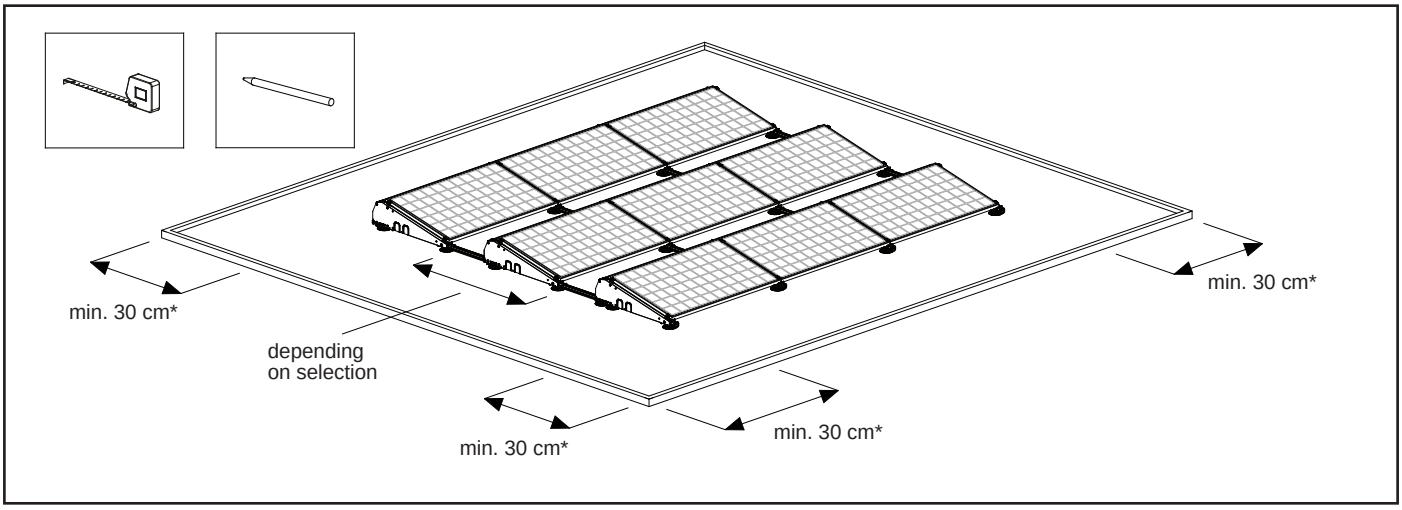

5.3 Cleaning the roof

Sweep the roof clean with a broom.
0DNH VXUH WKDW WKH SODFH ZKHUH WKH VRODU SDQHOV DUH SODFHG LV FOH
gravel, sand, stones, algae, dust, etc. can lead to instability of the system and/or cause damage to the roof.

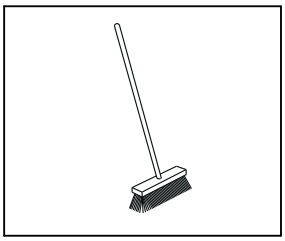

6. Installation

6.1 Mounting roof support to bases

As standard, the high base is placed on one roof support.
1. Attach the roof support to the high base by means of a click connection. For this purpose, use the middle click connection on the underside of the high base. Optional: In situations where ballast is placed, two roof supports are ¨[HG XQGHU WKH KLJK EDVH)RU WKLV SXUSRVH XVH WKH WZR FOLFN FR
2. Attach the roof support to the low base by means of the click connection.

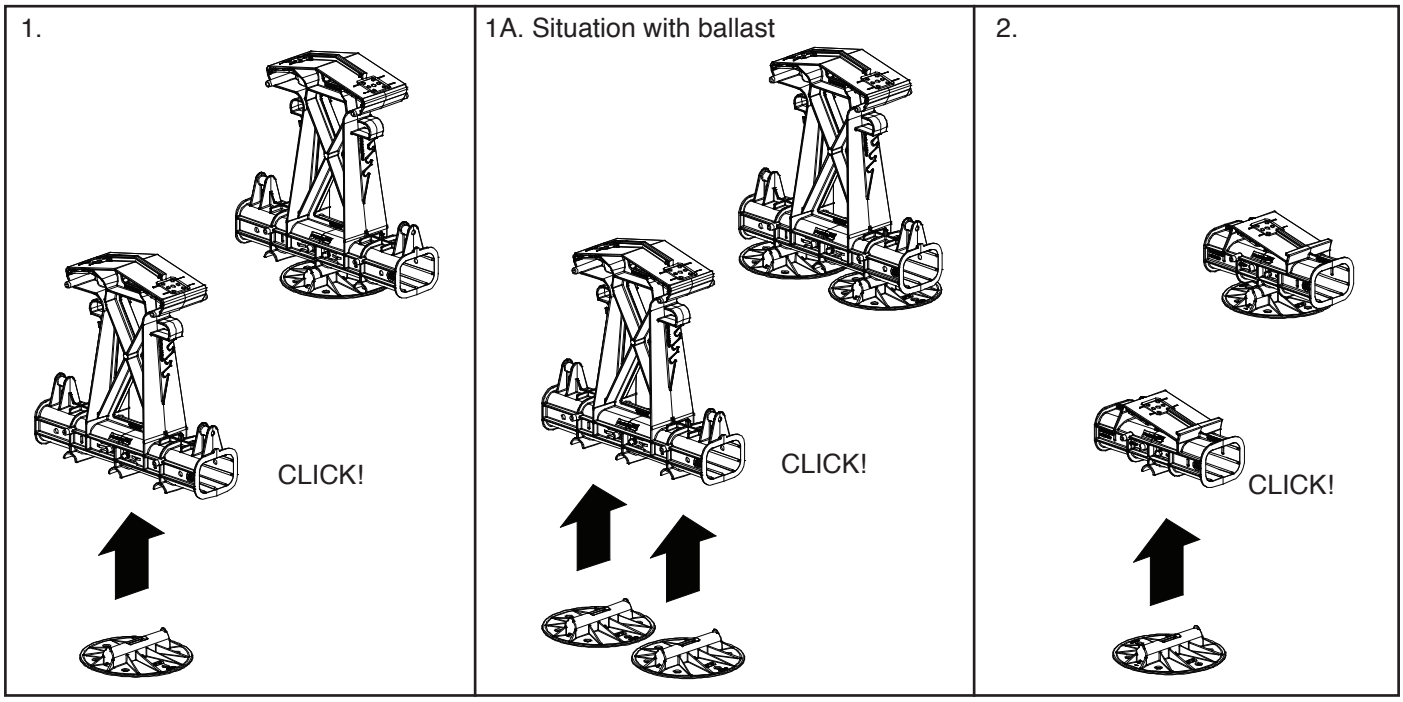

6.2 Mounting additional roof supports (optional)

,I DGGLWLRQDO URRI VXSSRUWV DUH UHTXLUHG WKHVH FDQ EH$WWDFKHG\W
roof support to the adapter by means of the click connection. This combination can then be snapped in place sideways DQ\ZKHUH RQ D EDVH SUR¨OH

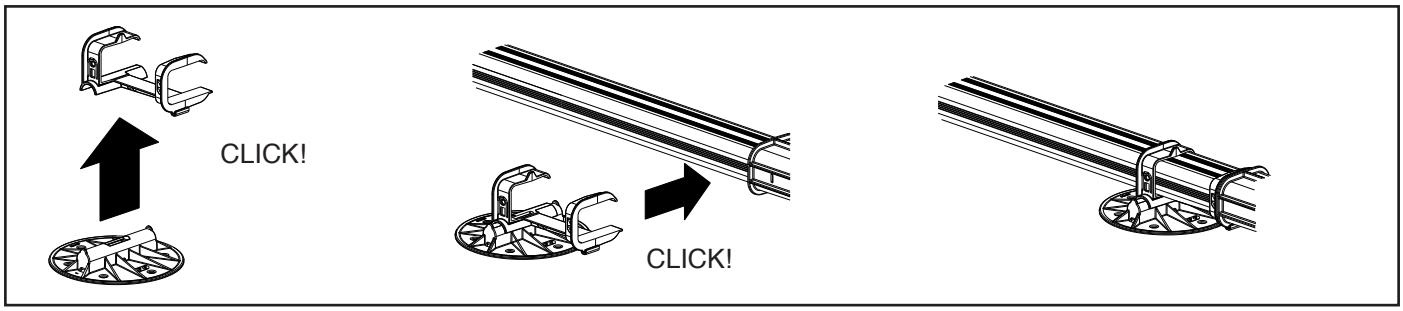

6.3 Mounting TPO Protective Mat (optional)

7KH RSWLRQDO 732 SURWHFWLRQ PDW FDQ EH XVHG WR SURWHFW WKH 73
open and place the roof support under the lips of the mat. Make sure that the roof support is properly enclosed by the rubber lips.

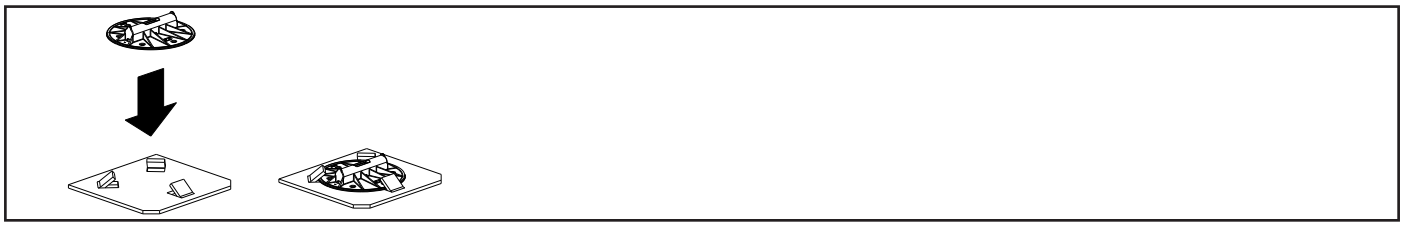

6.4 Equipotential bonding and mounting base profile on bases

The high and low bases are also available in pre-assembled form: 1007022-S and 1007031-S.
If you are assembling yourself, please follow the following instructions.

(DUWKLQJ HTXLSRWHQWLDO ERQGLQJ WKH EDVH SUR¿OHV RSWLRQDO
3ODFH WKH JURXQGLQJ VSULQJ LQ WKH VORWV RI WKH KLJK EDVH EHIRU
XVH WKH KLJK EDVH DUWLFOH QR 6 LQ ZKLFK WKH 7JURXQGLQJ VSU
grounding spring creates a connection area of 3mm² 7ZR JURXQGLQJ VSULQJV RQH VSULQJ RQ
create a connection area of 6mm² 7KH WHHWK RQ WKH JURXQGLQJ VSULQJ ELWH LQWR
durable connection.
3XW WKH KLJK EDVH LQF URRI VXSSRUW XSULJKW DQG VOLGH WKH HQ
until it clicks into place.
3ODFH WKH JURXQGLQJ VSULQJ LQ WKH VORWV RI WKH ORZ EDVH EHIRU
6OLGH WKH ORZ EDVH LQF URRI VXSSRUW RQWR WKH RWKHU HQG RI W
7KH ¨UVW)ODW)L[ )XVLRQ VHJPHQW LV UHDG\ 5HSHDW WKH DERYH VWH
WR LQVWDOO WKH ¨UVW WZR URZV RI VRODU SDQHOV

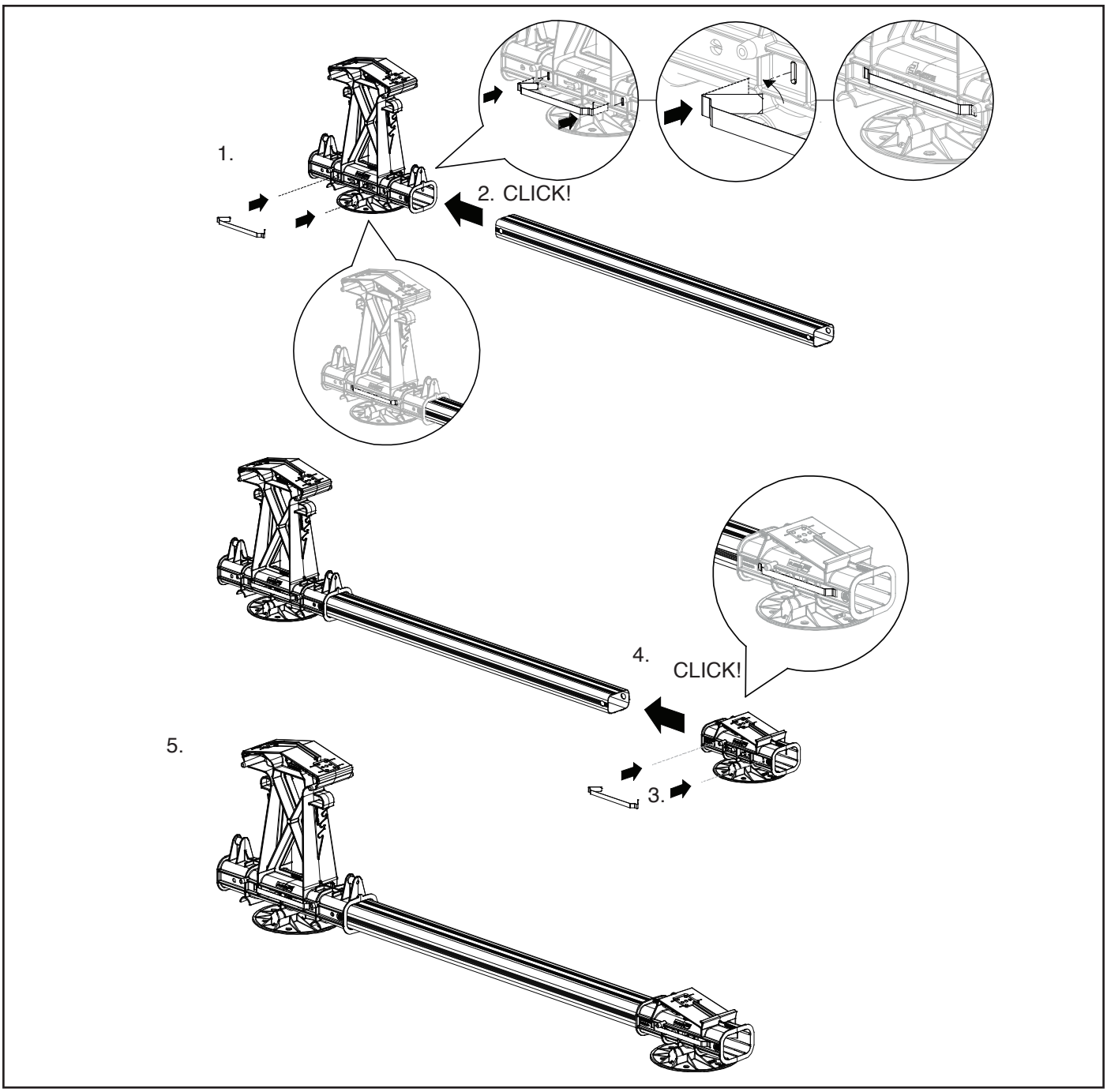

6.5 Coupling FlatFix Fusion segments

1. Make two FlatFix Fusion segments upright and place them at such a distance behind each other so that the base SUR¨OH FDQ EH PRXQWHG EHWZHHQ WKHP 6OLGH WKH HQG RI WKH EDVH FlatFix Fusion segment until it clicks.

6OLGH WKH VHFRQG)ODW)L[ )XVLRQ VHJPHQW ZLWK WKH RSHQLQJ RI W clicks.

7KH ¨UVW FRXSOHG)ODW)L[ )XVLRQ VHJPHQWV DUH QRZ UHDG\ 5HSHDW)ODW)L[ )XVLRQ VHJPHQWV WR VHW RXW WKH ¨UVW WZR URZV RI VRODU S

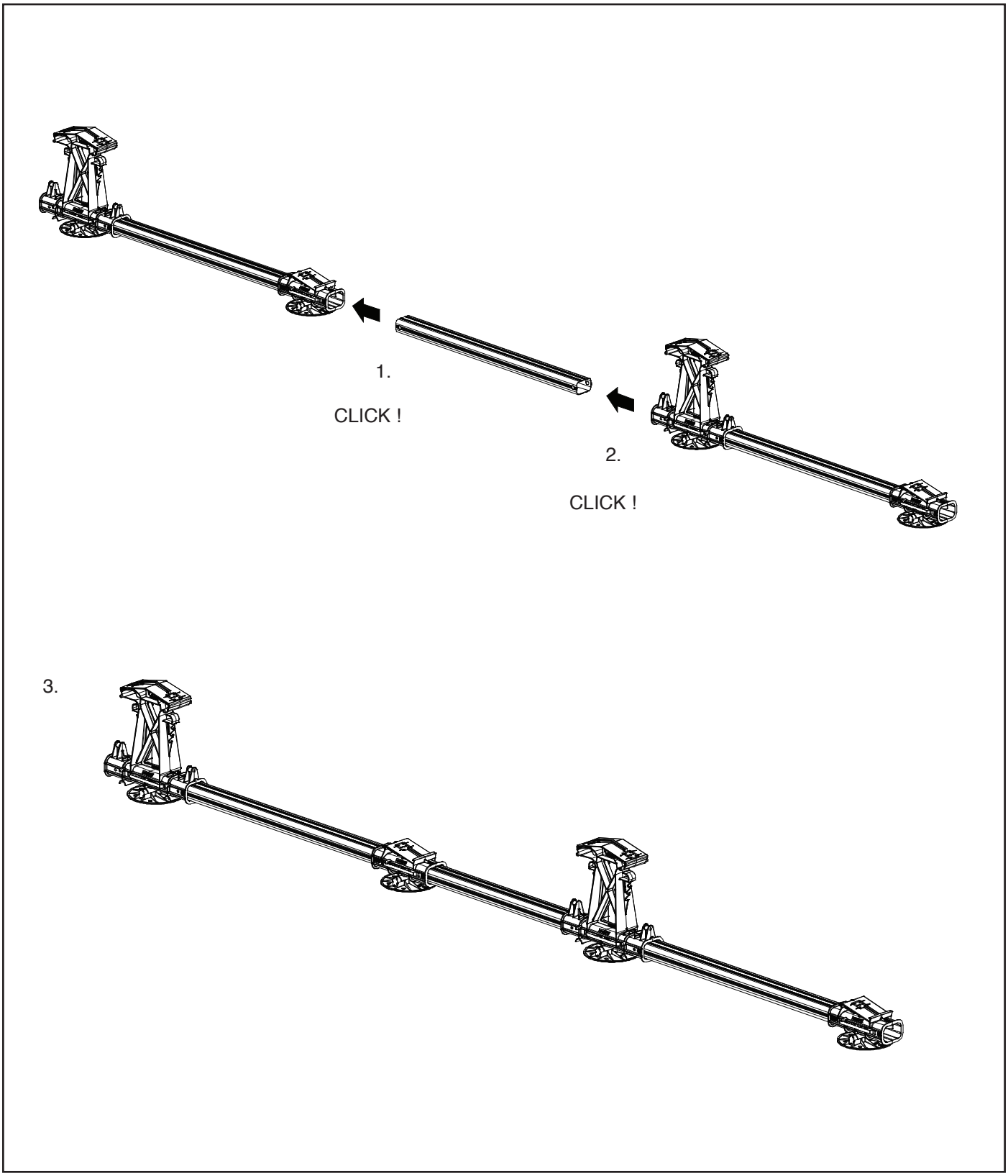

6.6 Positioning FlatFix Fusion segments

You determine the position of the FlatFix Fusion segments based on the position of the solar panels on the roof. Distribute the FlatFix Fusion segments evenly along the line where the solar panels are to be installed. The FlatFix)XVLRQ VHJPHQWV PD\ KDYH D FHQWUH WR FHQWUH VSDFLQJ RI XS WR P
Mark with chalk or marker the place on the roof where the FlatFix Fusion segments are to be placed.
Ensure that the FlatFix Fusion segments are aligned with each other.

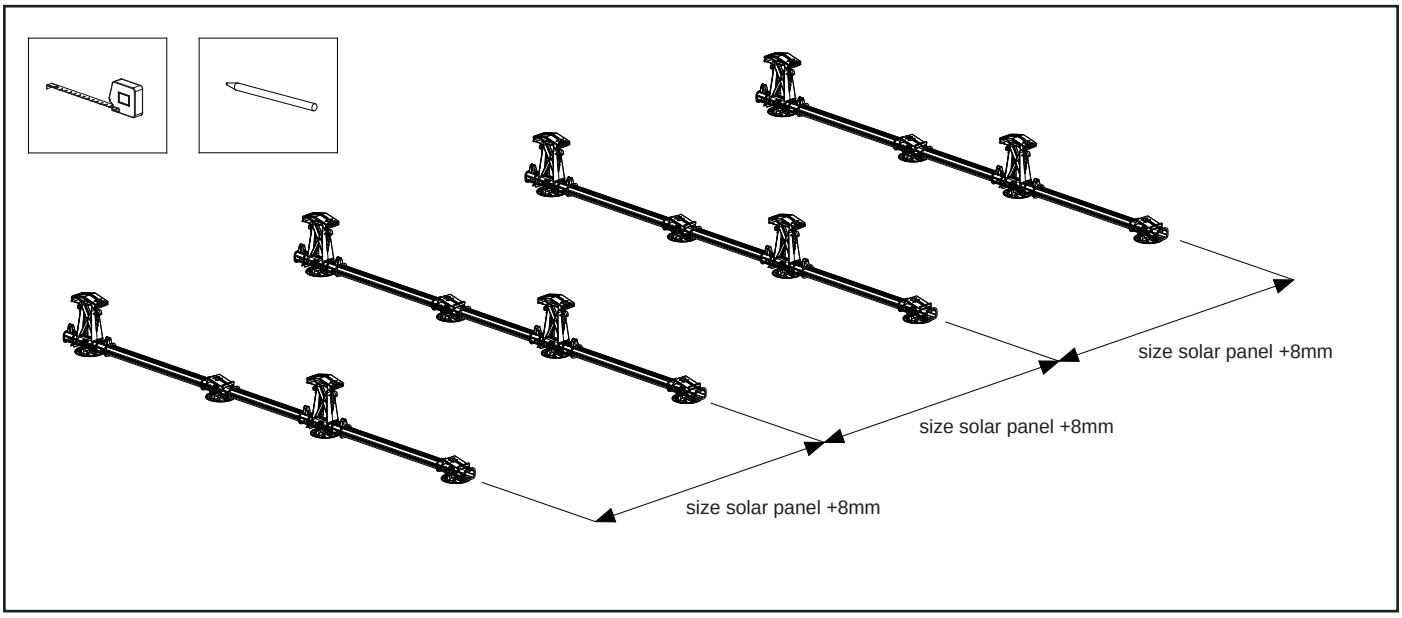

6.7 Mounting ballast containers

The ballast positions are determined using the calculator. Place the ballast container at the points indicated by the calculator. **NOTE!** 0DNH VXUH WKDW WKH KLJK EDVHV DW WKH EDOODVW FRQWDL following instructions only relate to standard ballast container installation.
NOTE!)RU EDOODVW FRQ¨JXUDWLRQV VHH DQQH[VHFWLRQ
,QVHUW WKH ¨UVW EDOODVW FRQWDLQHU DW DQ DQJOH DQG SODFH LW EH
ballast container are located over the upright lugs of the high base.
Note that the FlatFix Fusion segments are directly adjacent to each other because of the alignment of the solar panels!

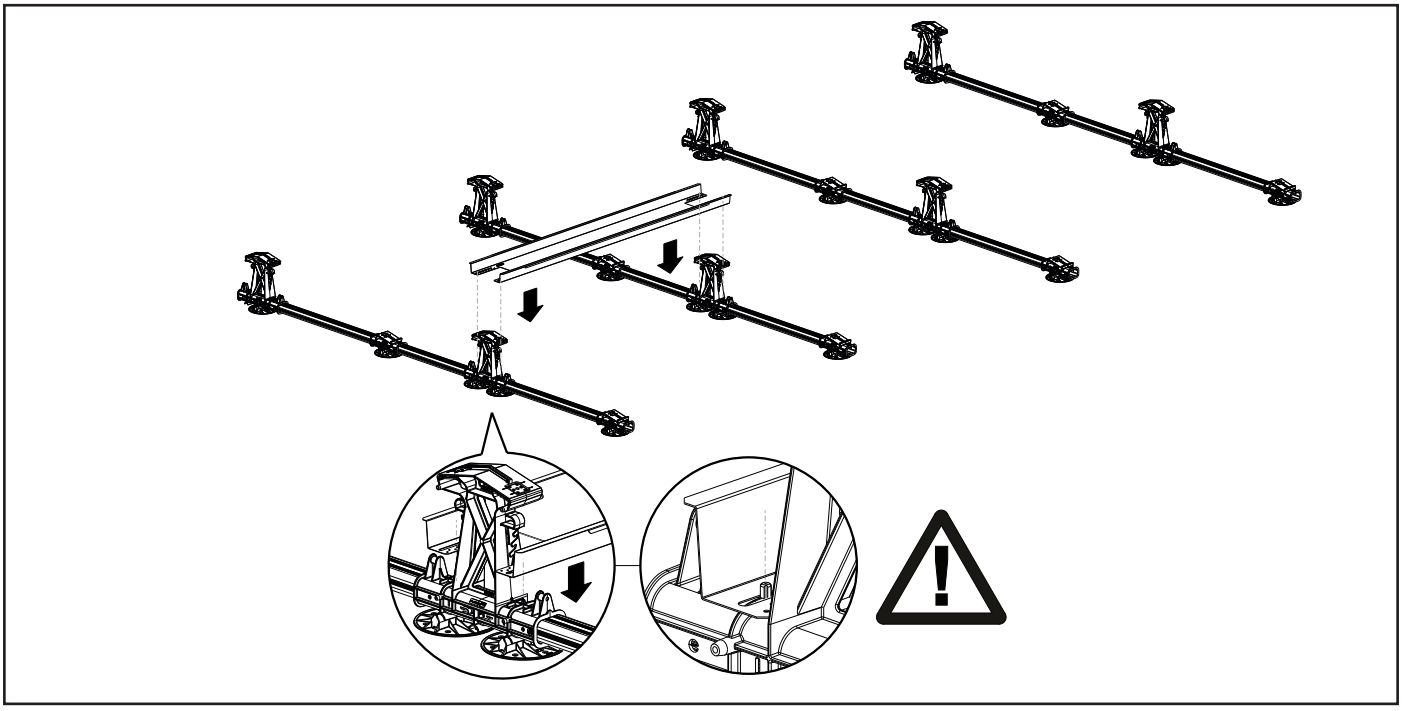

/RFDWH WKH VHFRQG EDOODVW FRQWDLQHU EHWZHHQ WKH)ODW)L[ )XVLR
and that the slots of the ballast container are positioned over the upright lugs of the high base.

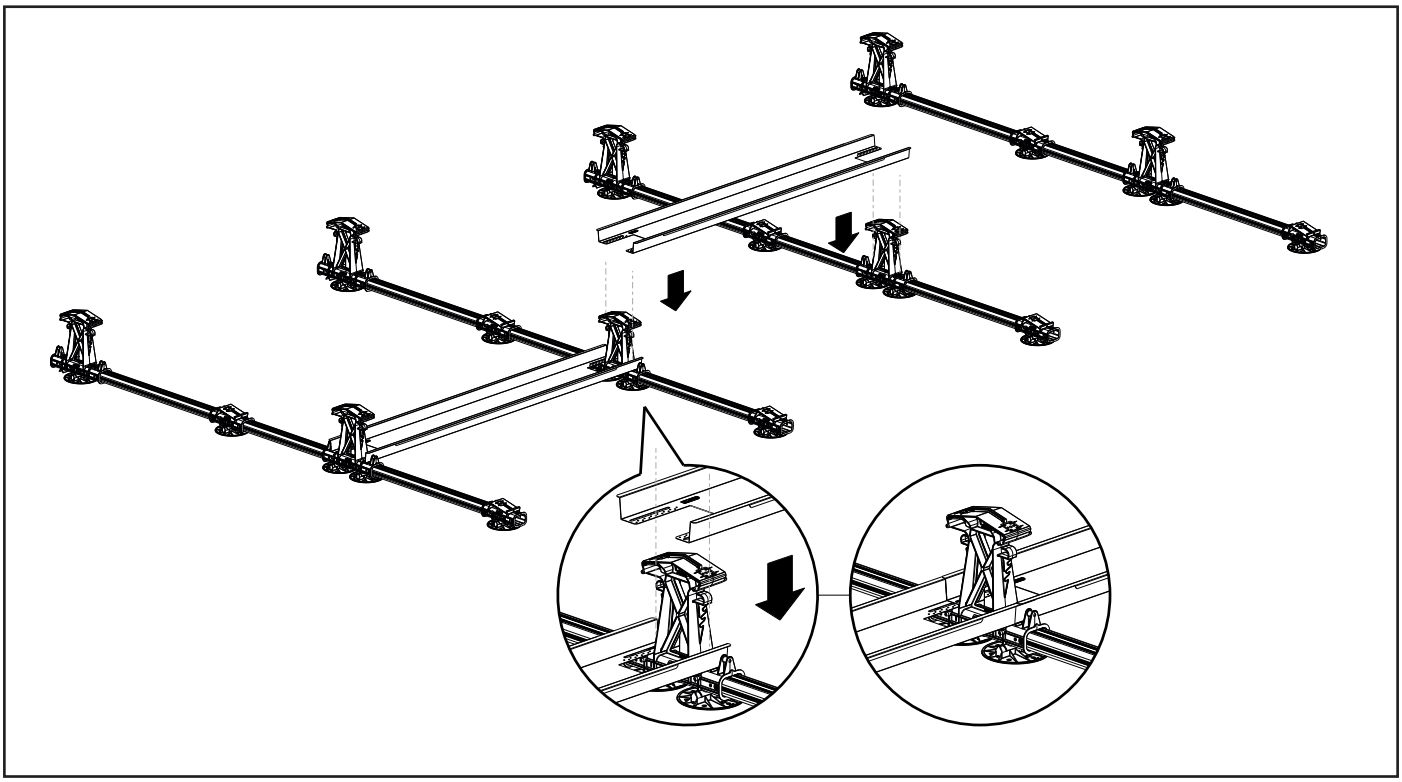

Locate the third ballast container between the FlatFix Fusion segments so that it overlaps the second ballast container and that the slots of the ballast container are positioned over the upright lugs of the high base. Repeat these steps until all ballast containers are installed.

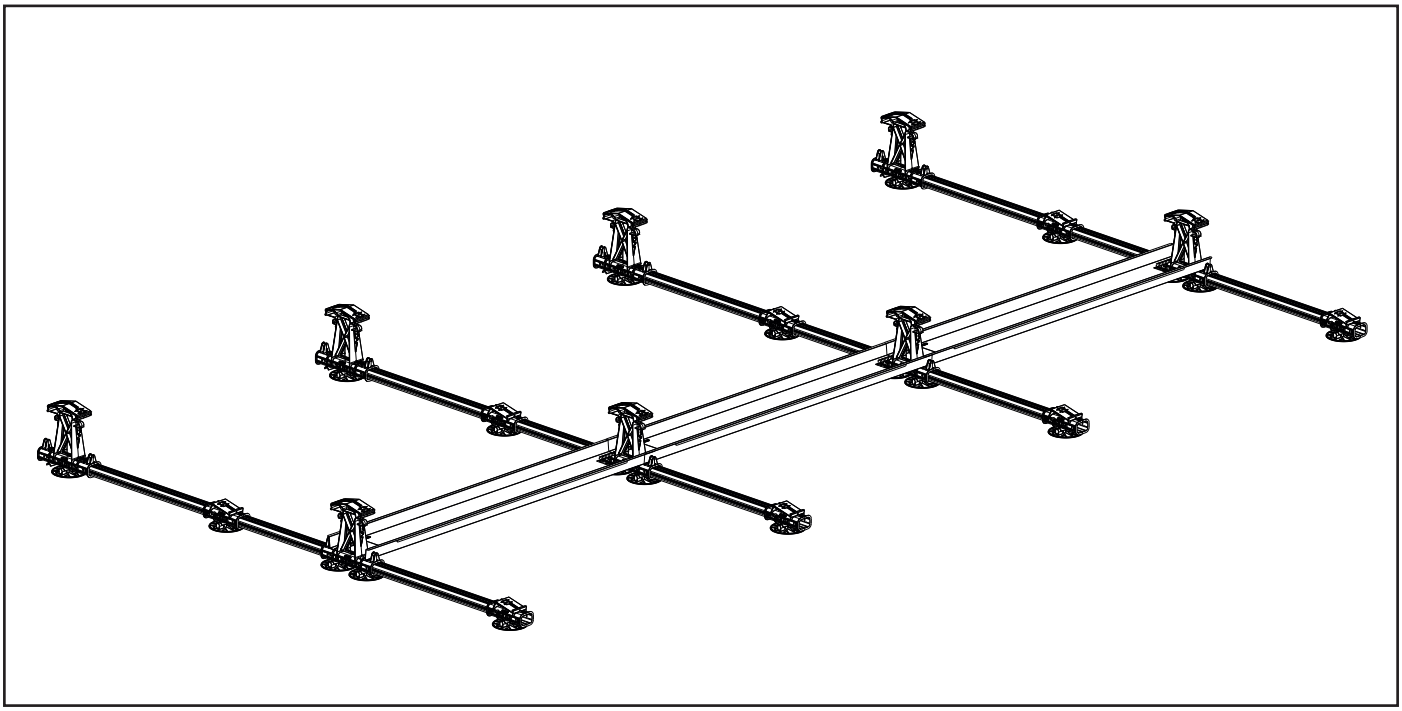

6.8 Installing 1st solar panel

1. Place the 1st solar panel between the raised lugs of the low base.
2. Carefully tilt the solar panel so that it lies between the raised lugs of the bases.

NOTE! Optionally, a low base extension can be installed for a larger panel range. This can only be done in FRPELQDWLRQ ZLWK WKH EDVH SUR¨OH RI PP VHH WDEOH UDQJH SDQH

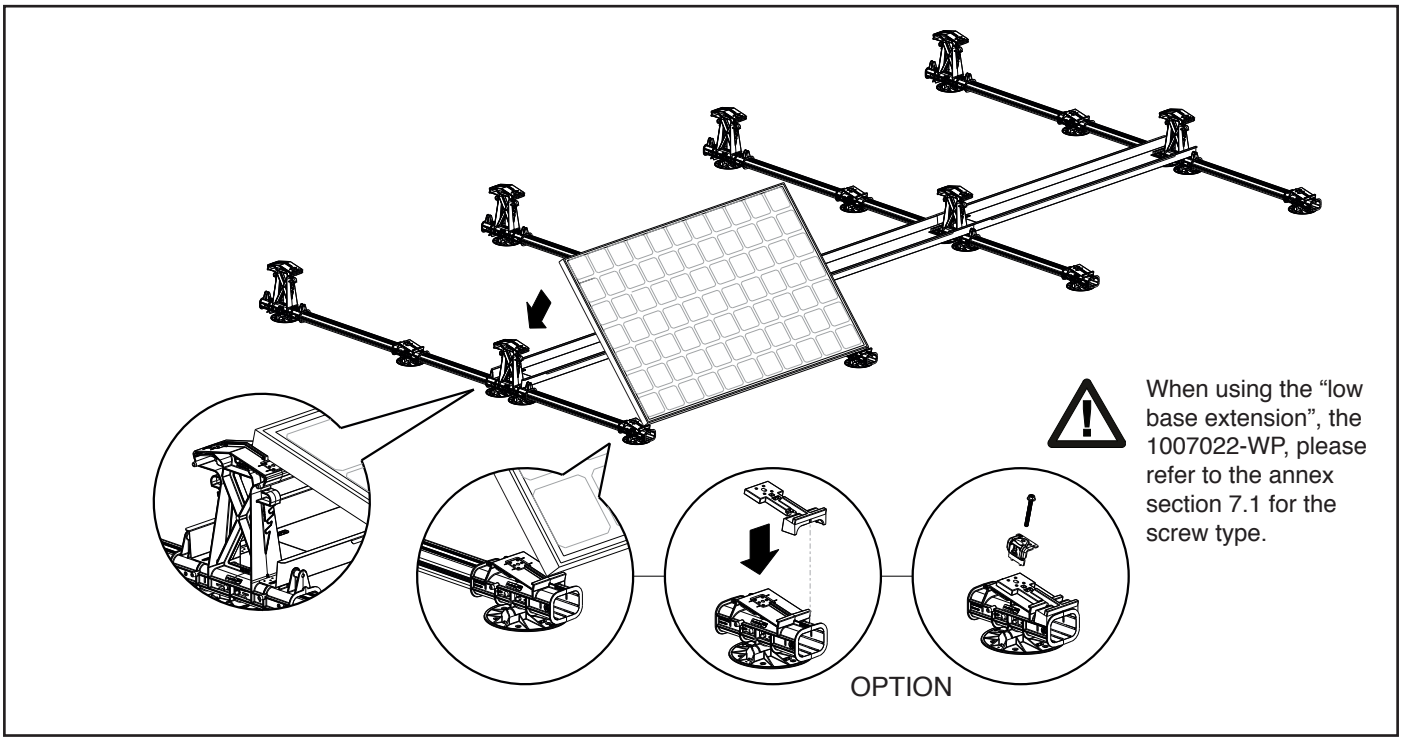

3. Place the end clamps on the edge of the solar panel and position them at the mounting holes in the high and low bases. Screw in the end clamp with the mounting screw into the mounting hole.

NOTE! The minimum tightening torque of the screw connection on **grey** FODPSV [[LV 1P PD[LPXP
The minimum tightening torque of the screw connection on **black** FODPSV [[LV 1P PD[LPXP 1
to your tool manual to set it to the correct torque.

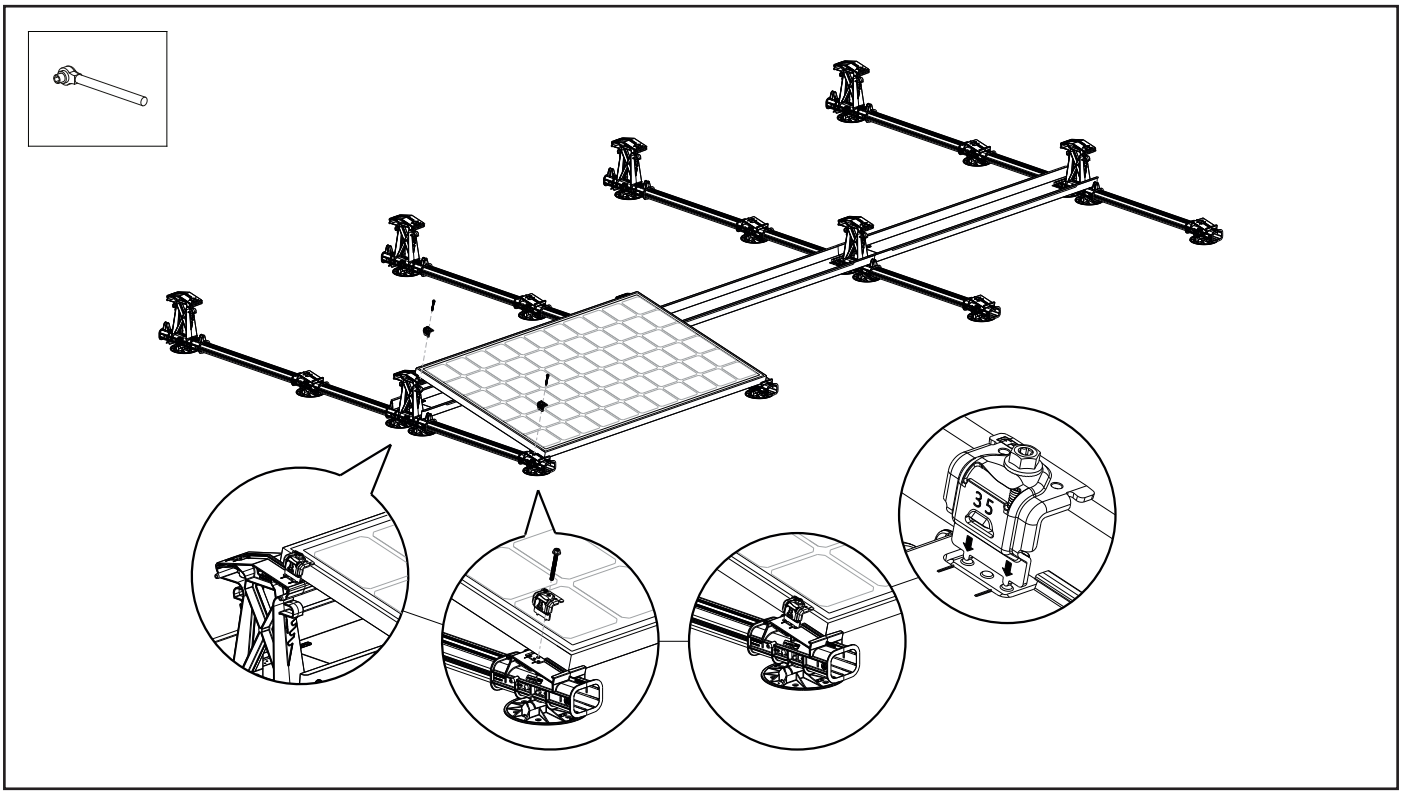

6.9 Equipotential bonding and installing other solar panels

Place the second solar panel on the bases so that it lies between the upright lugs. Then screw the mounting screw with a module clamp into the mounting holes of the bases.
The module clamp has an integrated equipotential bonding function so that the panels are equipotential bonded with each other, after which the entire row can be equipotential bonded to the earth rail. **NOTE!** See schematic representation in annex section 7.2. Make sure that the solar panels are properly aligned before tightening the screw!
NOTE! The minimum tightening torque of the screw connection on **grey** F O D P S V [[L V 1 P P D [L P X P
The minimum tightening torque of the screw connection on **black** F O D P S V [[L V 1 P P D [L P X P 1
Refer to your tool manual to set it to the correct torque. Repeat the above steps for the other panels located between.

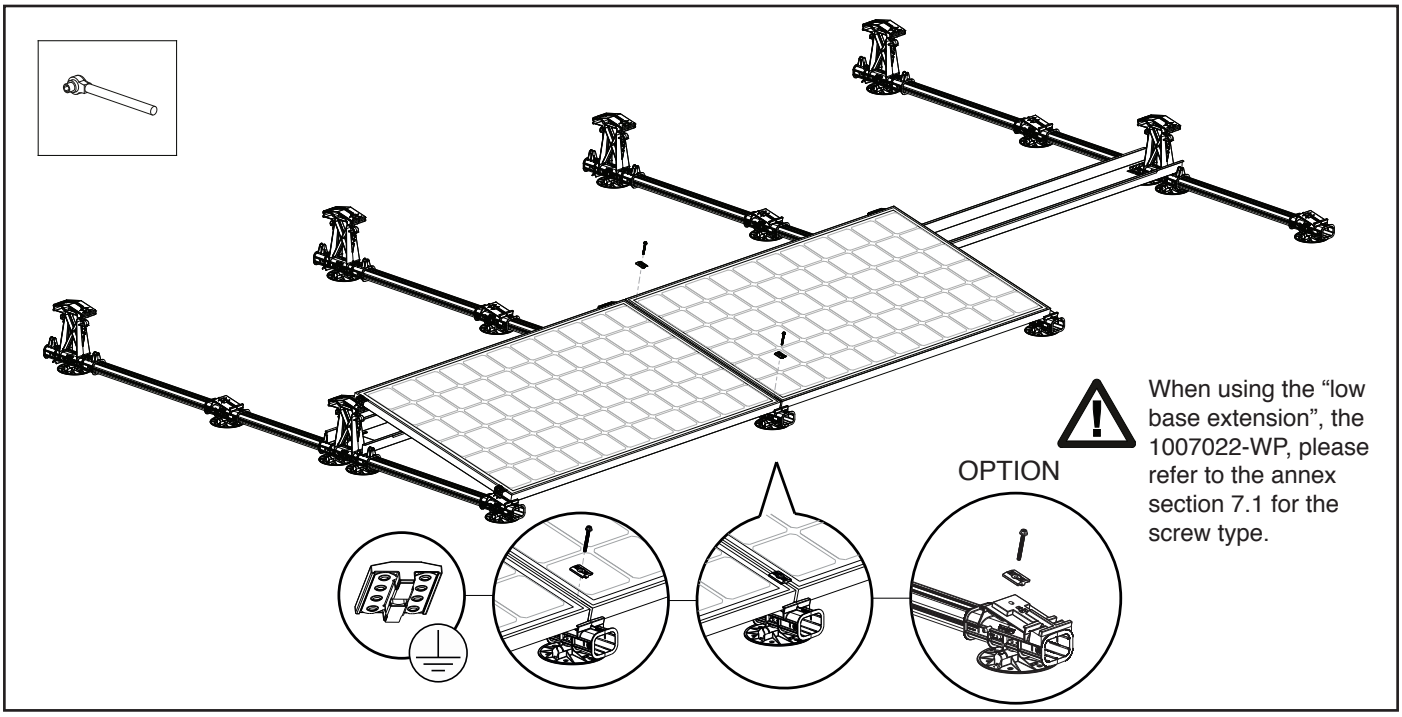

Place the last solar panel of the row on the bases so that it lies between the upright lugs. Then screw the mounting screw with a module clamp into the mounting holes of the bases. Then screw the two end clamps with the mounting screw into the mounting hole. Make sure that the solar panels are completely straight before tightening the screw!
NOTE! The minimum tightening torque of the screw connection on **grey** F O D P S V [[L V 1 P P D [L P X P
The minimum tightening torque of the screw connection on **black** F O D P S V [[L V 1 P P D [L P X P 1
Refer to your tool manual to set it to the correct torque.
Repeat the above steps for the other panels located between.

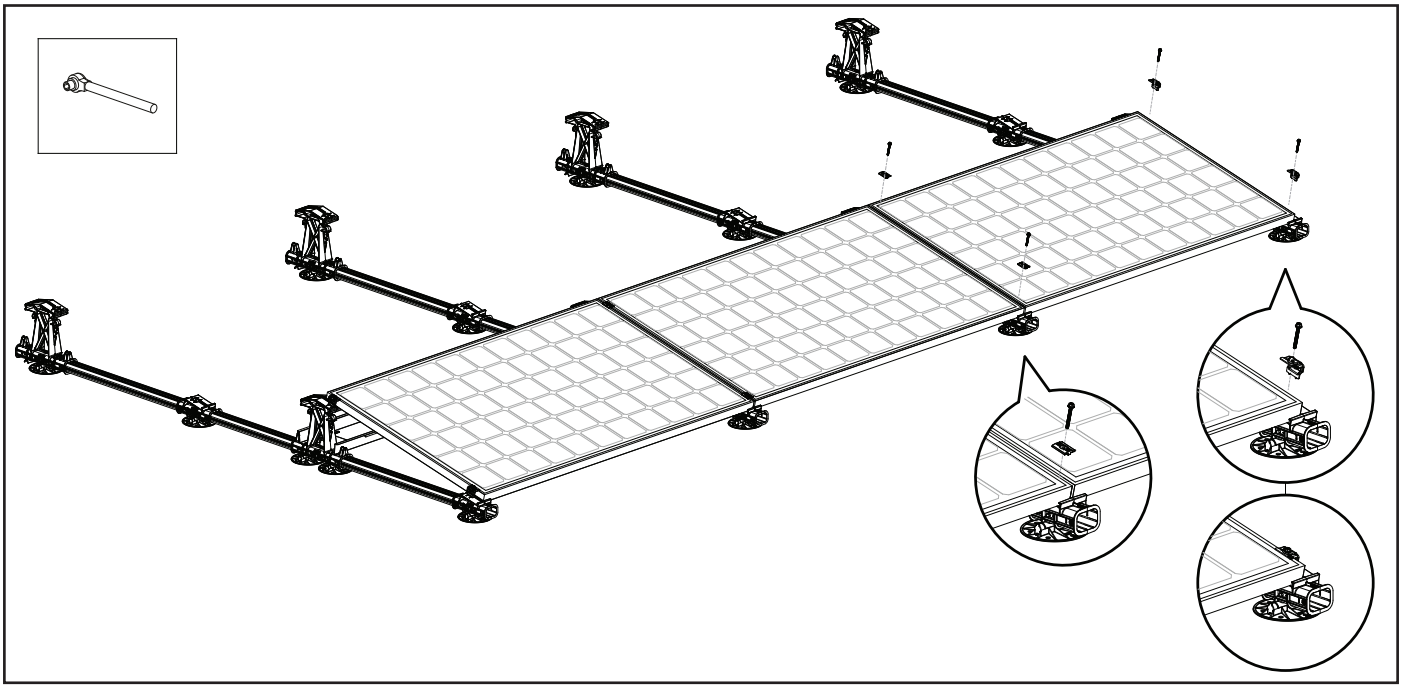

6.10 Mounting optimisers & cables

&OLSV DUH LQFOXGHG ZLWK LQWHJUDWHG FDEOH PDQDJHPHQW DQG RSWL
stowed away. There are also cut-outs in the high bases through which the cables can be fed. This prevents the cables
IURP O\LQJ GLUHFWO\ RQ WKH ZHW URRI)RU LQVWDOODWLRQ IROORZ W
3ODFH WKH FOLSV RYHU WKH QDUURZ VLGH RI WKH EDVH SUR¨OHV
7XUQ WKH FOLSV VR WKDW WKH\ DUH FODPSHG RYHU WKH ZLGH VLGH RI
3. Feed the cables through the cut-outs. The clips also provide a holder for a Ø25 mm conduit.
4. Feed the end of the cable through one of the cable guides of the high base.
5. The cables of the solar panel can be attached to the high base in the cable guide.

Optional: Clip the optional optimiser onto the cable clip.

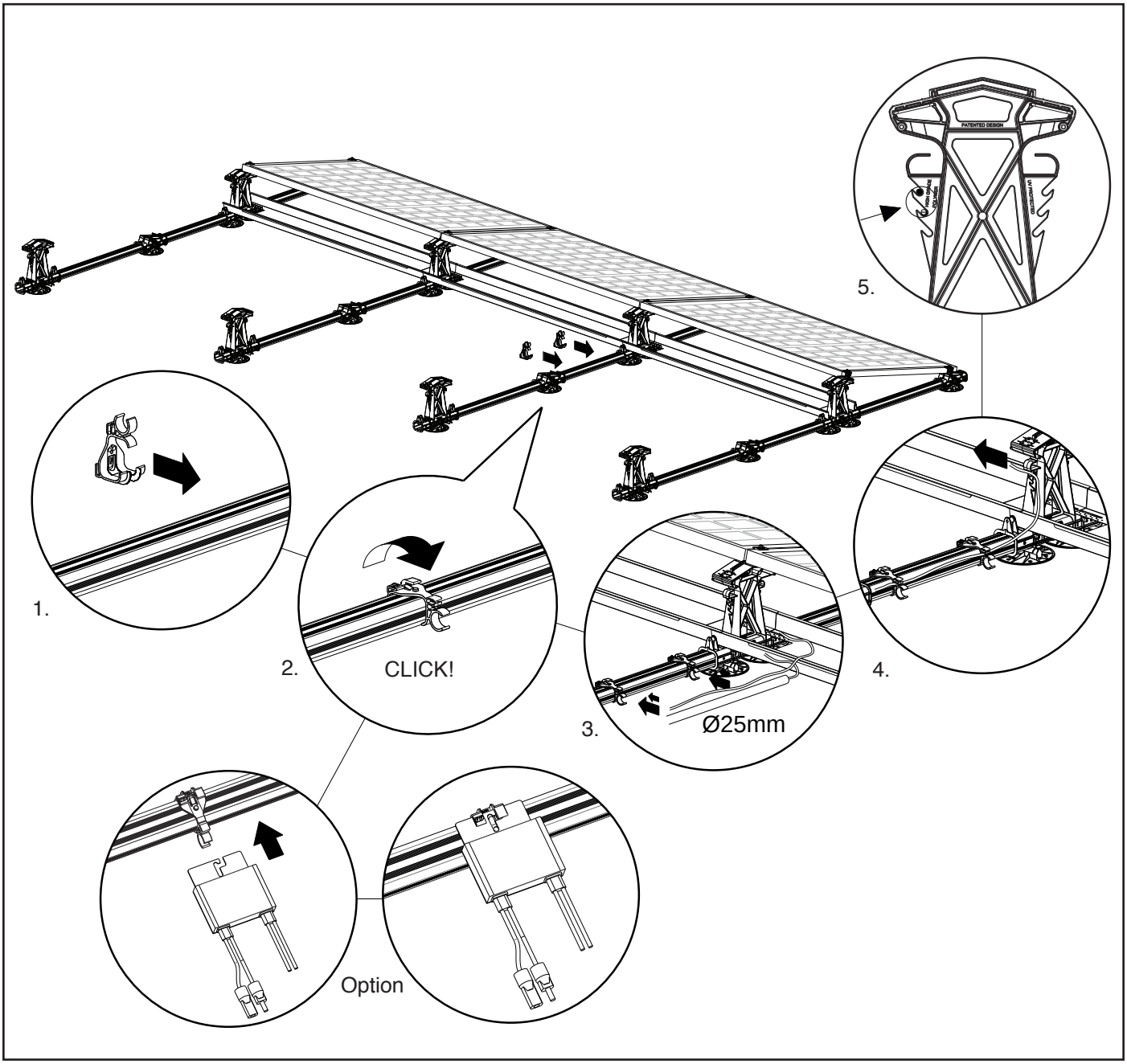

6.11 Equipotential bonding multiple rows (optional, see also section 7.3)

The module clamps ensure good equipotential bonding between panels in the row direction. The rows can easily be equipotential bonded to the earth busbar by connecting a 6mm^2 P X O W L F R U H F D E O H W R H Q G F O D P S the earth busbar.
If a blind mounting is desired under the panels, the grounding clamps can also be attached directly to one of the panels per row. See section 7.3.2 for both options.

1. Place the multi-core cable at one side of the system. The multi-core cable can be easily clipped into the FlatFix Fusion cable clip. To connect the multi-core cable to the end clamp, a loop must be created to the end clamp.
2. Use the grounding clamp to connect the multi-core cable to the end clamp. Insert the multi-core cable into the grounding clamp and clamp the grounding clamp securely to the end clamp using pliers. Attach a grounding clamp to at least 1 end clamp per row.

NOTE! The diagram in annex section 7.3.2 shows the positions of multi-core cable and grounding clamps on the end clamps.

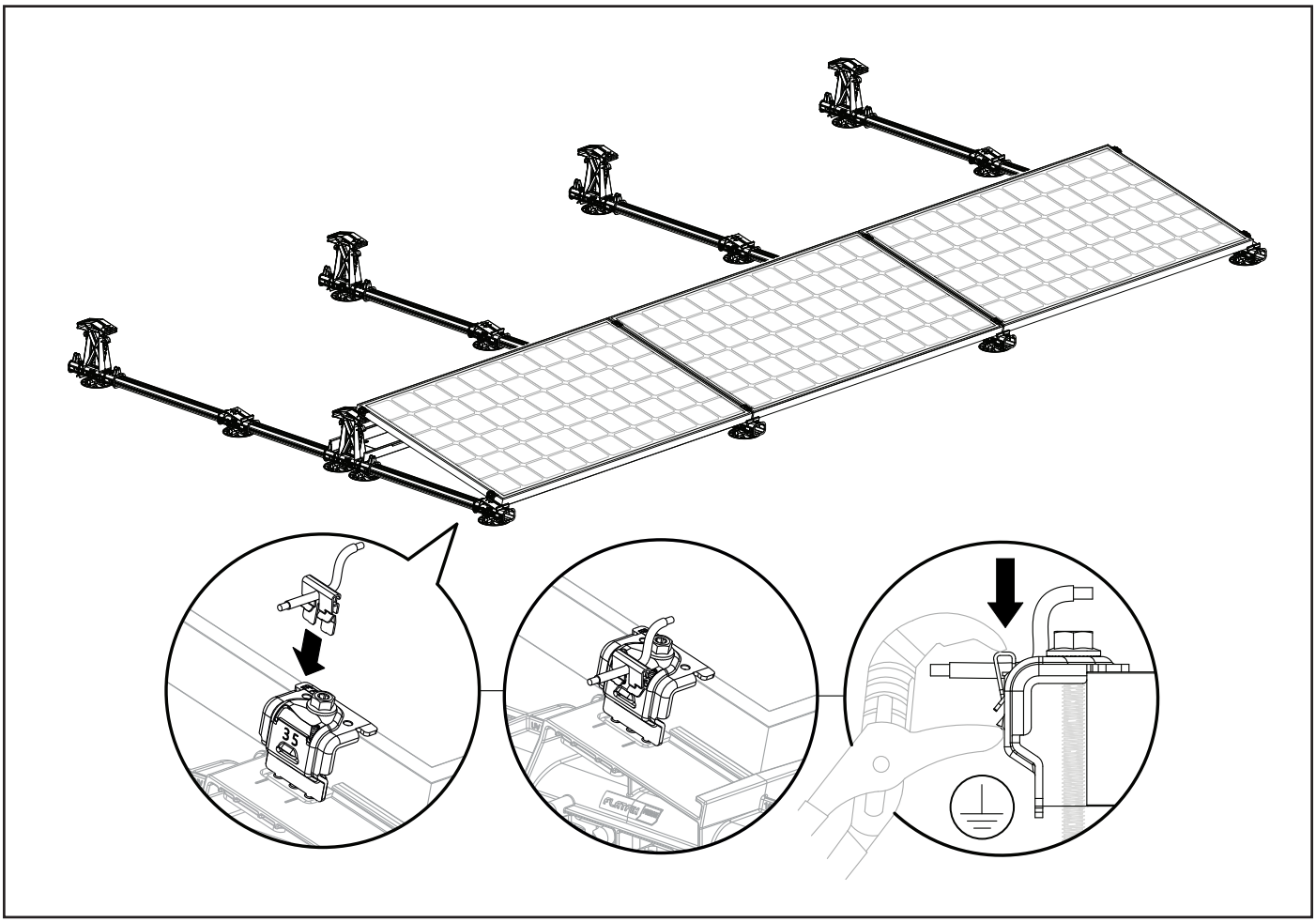

6.12 Equipotential bonding ballast containers (optional)

The ballast containers can easily be earthed in the same way as the rows.
The grounding clamps are pressed onto the ballast containers. The teeth of the grounding clamps will engage in the ballast container, creating a solid and durable connection.
The earthing cable for earthing the rows can also be used for earthing the ballast container.
3 O D F H D J U R X Q G L Q J F O D P S R Q H D F K ¨ U V W D Q G O D V W E D O O D V W F R Q W D L Q

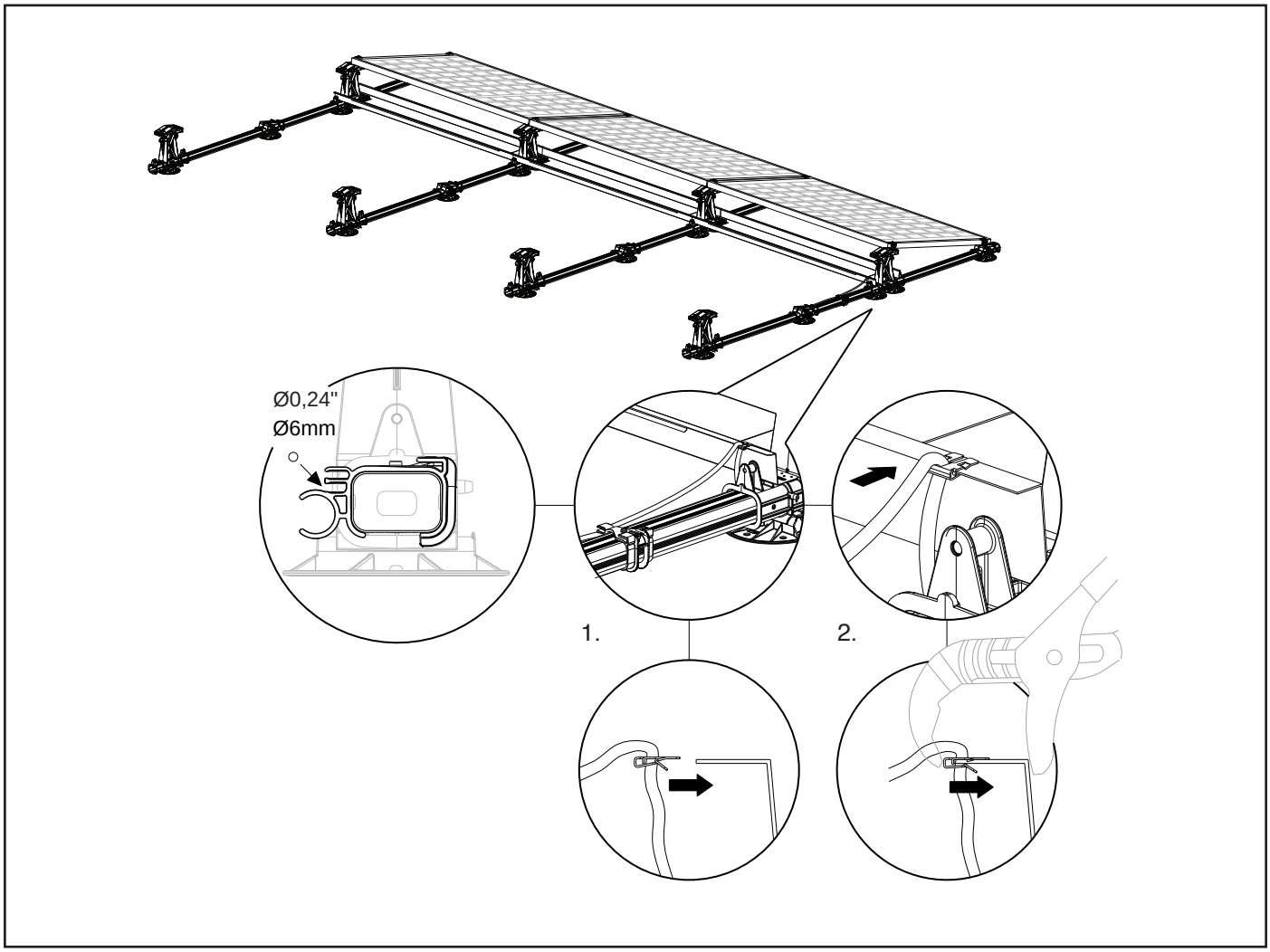

6.13 Locating ballast

To keep the solar panels in place, you must put ballast in the ballast containers.
As standard you can use concrete paving stones sized 21x10.5x8 cm as ballast. These weigh approximately 4 kg/
XQLW DQG ¨W ZHOO LQWR WKH EDOODVW FRQWDLQHUV $OWHUQDWLYHO\
[FP RU JUDYHO ,I \RX XVH JUDYHO ¨UVW SODFH D FRQFUHWH7 KSDW LQ
prevents the gravel from sliding out of the ballast container.
Carefully comply with the ballast weights from the calculator! **NOTE!**)RU EDOODVW FRQ¨JXUDWLRQV V

NOTE! %HIRUH SODFLQJ WKH EDOODVW \RX VKRXOG FKHFN ZKHWKHU WKH V
LW LV SURSHUO\ DOLJQHG ZLWK WKH URRI HGJHV <RX FDQ QRZ VWLOO VC
installed, correction is no longer possible!

If your roof is higher than 12 metres, we recommend that you contact your supplier.
They can then determine the correct weight depending on your situation.

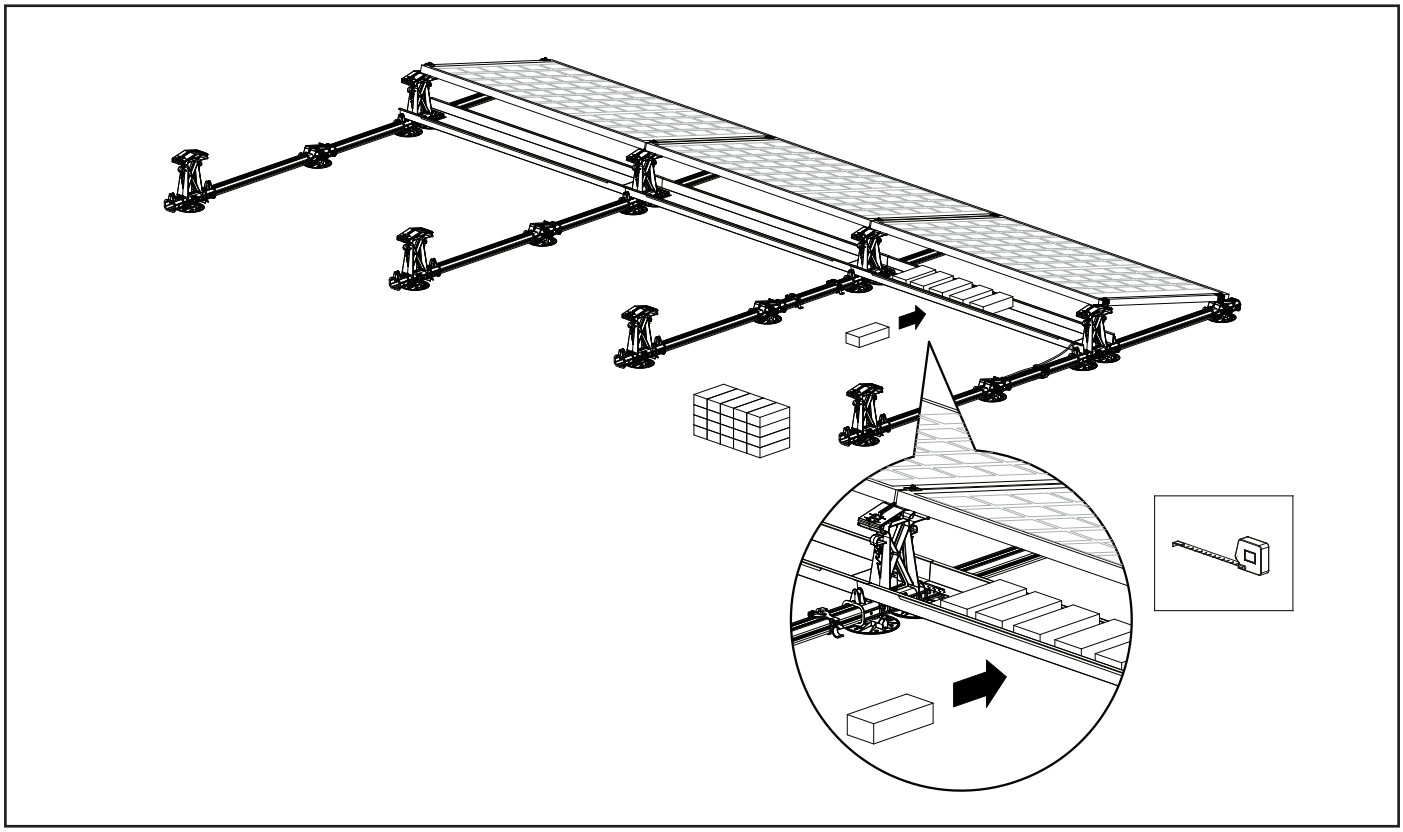

6.14 Mounting and equipotential bonding wind deflector back

7KH ZLQG GH©HFWRUV DW WKH EDFN RI WKH VRODU SDQHOV FDQ RSWLRQ
KLJK EDVHV 7KH RYHUODS WKDW RFFXUV EHWZHHQ WKH ZLQG GH©HFWRU
FRQQHFW WKH ZLQG GH©HFWRUV WR WKH UHVW RI WKH V\VWHP **NOTE!** The dia
of the grounding brackets.

1. Place the 1st ZLQG GH©HFWRU DW WKH UHDU RI WKH VRODU SDQHOV VR WKDW
EHWZHHQ WKH UDLVHG OXJV RI WKH KLJK EDVHV DQG ZLWK WKH VLGH RI
edge of the high base.

2QO\ DWWDFK RQH VLGH RI WKH ZLQG GH©HFWRU LQVWHDG RI WKH HGJ
PRXQWLQJ VFUHZ 0 [LQ WKH VORW RI WKH ZLQG GH©HFWRU DQG VFUHZ

NOTE! The maximum tightening torque of the screw connections is 9 Nm.
Refer to your tool manual to set it to the correct torque.

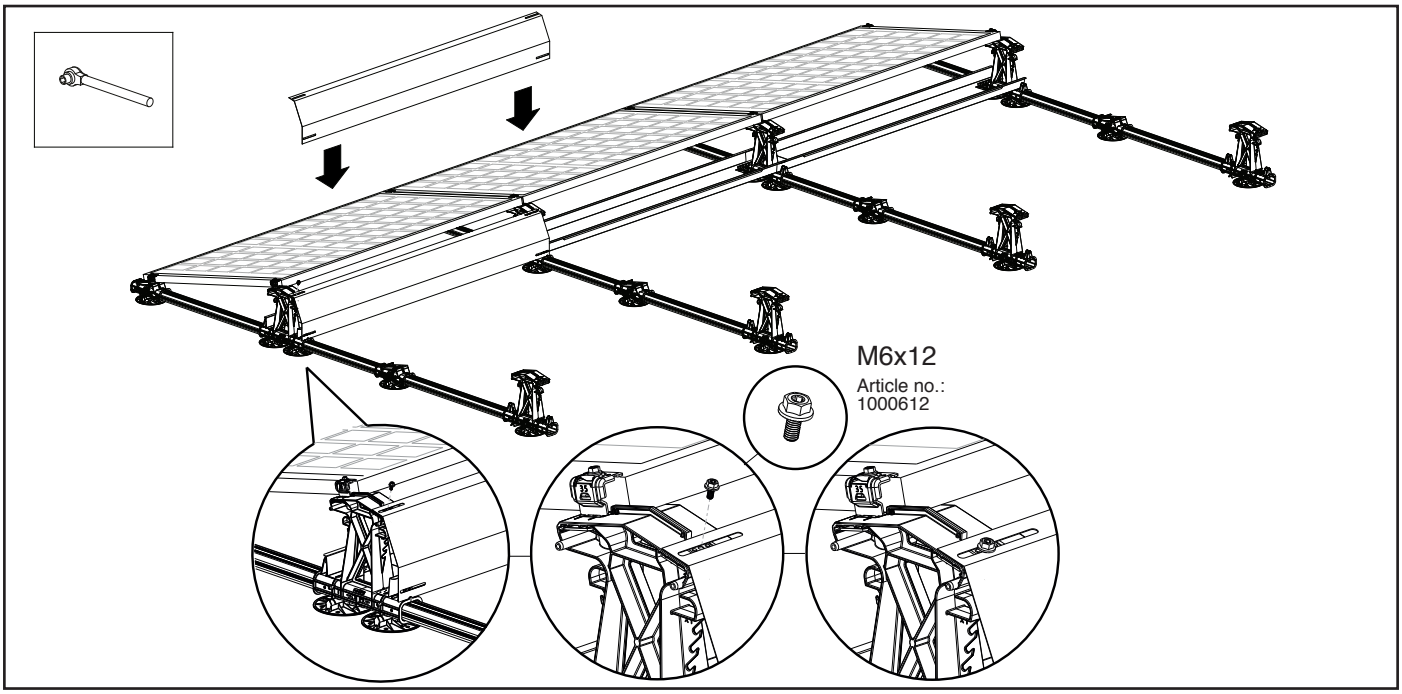

Place the 2nd ZLQG GH©HFWRU DW WKH UHDU RI WKH VRODU SDQHOV VR WKDW
WKH UDLVHG OXJV RI WKH KLJK EDVHV DQG WKH VORWV RI WKH ZLQG GH©
0RXQW RQO\ RQH VLGH RI WKH ZLQG GH©HFWRU LQVWHDG RI WKH
WKH VORW RI WKH and screw it into the mounting holes of the high base. Repeat the above steps for
WKH RWKHU ZLQG GH©HFWRUV EHWZHHQ

NOTE! The maximum tightening torque of the screw connections is 9 Nm.
Refer to your tool manual to set it to the correct torque.

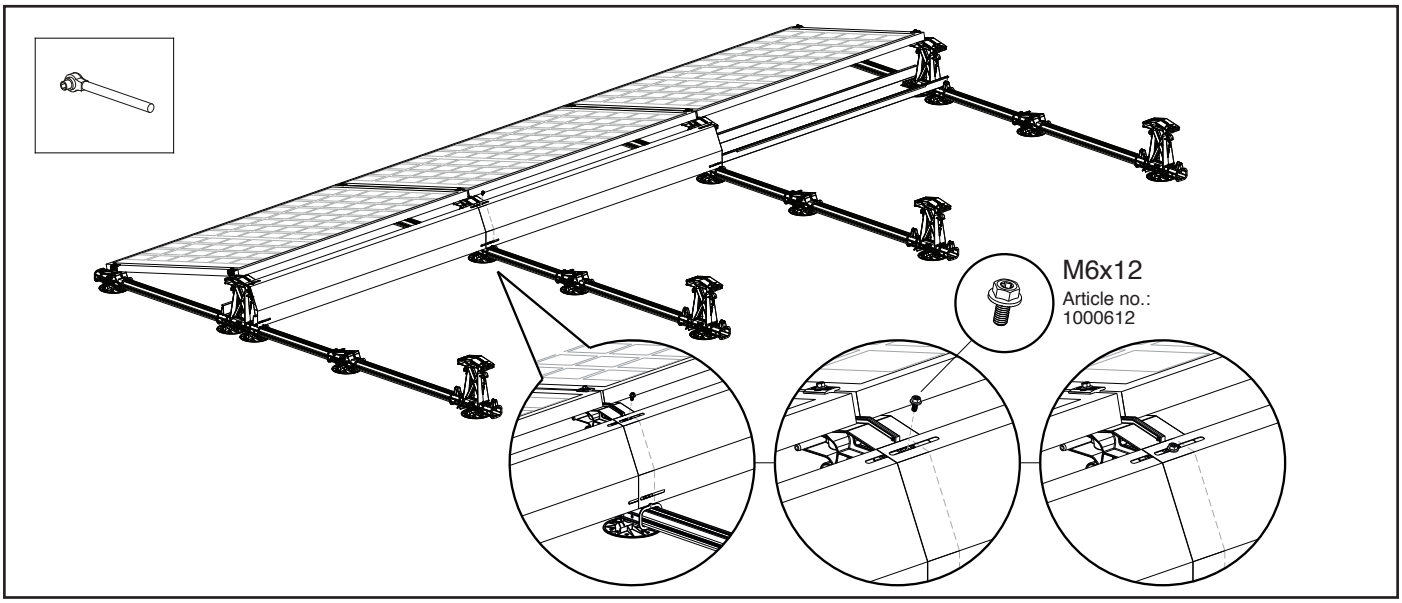

3ODFH WKH ODVW ZLQG GH©HFWRU DW WKH UHDU RI WKH VRODU SDQHOV WKH UDLVHG OXJV RI WKH KLJK EDVHV DQG WKH VORWV RI WKH ZLQG GH© $WWDFK WKH ZLQG GH©HFWRU RQ ERWK VLGHV RI WKH 2 top slots of the ZLQG GHDHFWRU using the M6x12 mounting screws and tighten them into the mounting holes of the high bases. **NOTE!** The maximum tightening torque of the screw connections is 9 Nm. Refer to your tool manual to set it to the correct torque.

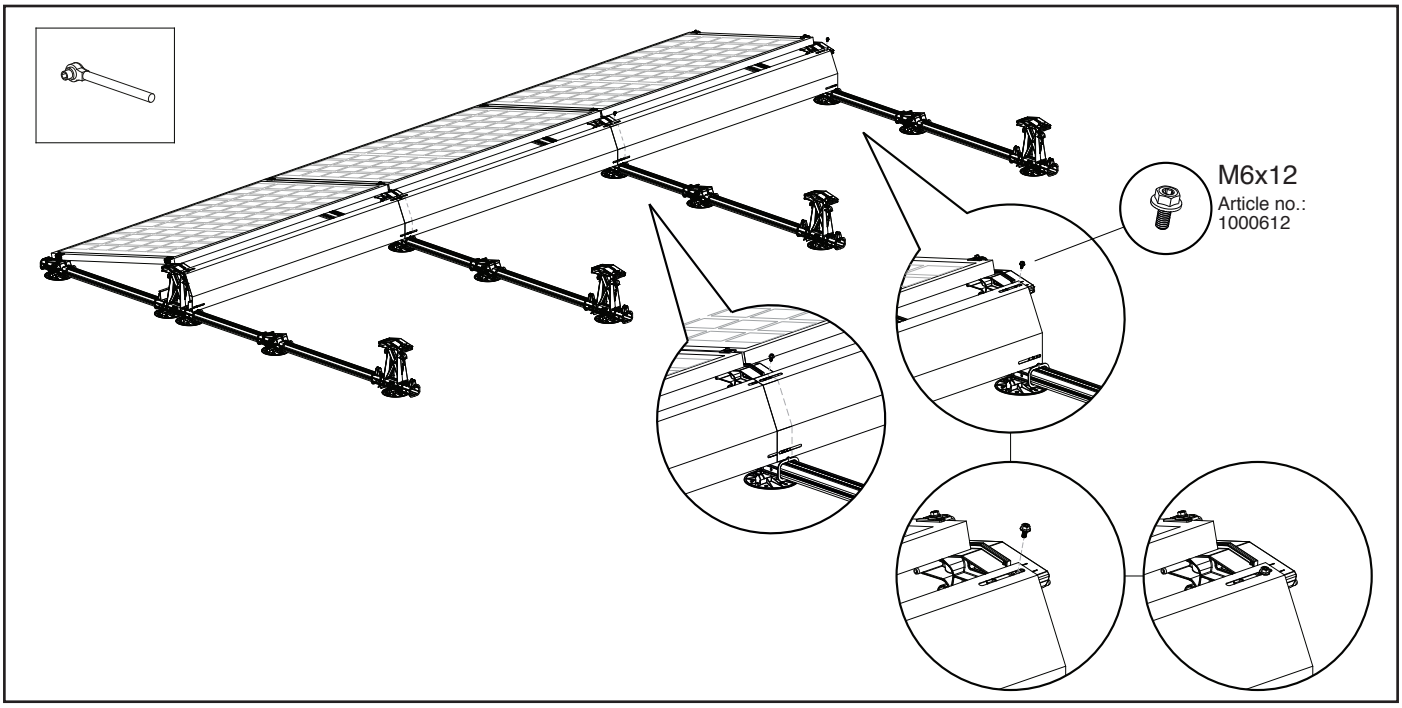

$WWDFK WKH ZLQG GH©HFWRUV RQ ORZHU VLGHV RI WKH VORWV RI WKH ZLQG GHDHFWRU using the M6x12 mounting screws and tighten them into the mounting holes of the high bases. **NOTE!** The maximum tightening torque of the screw connections is 2 Nm. Make sure that the mounting screws do not slip in the base. Refer to your tool manual to set it to the correct torque.

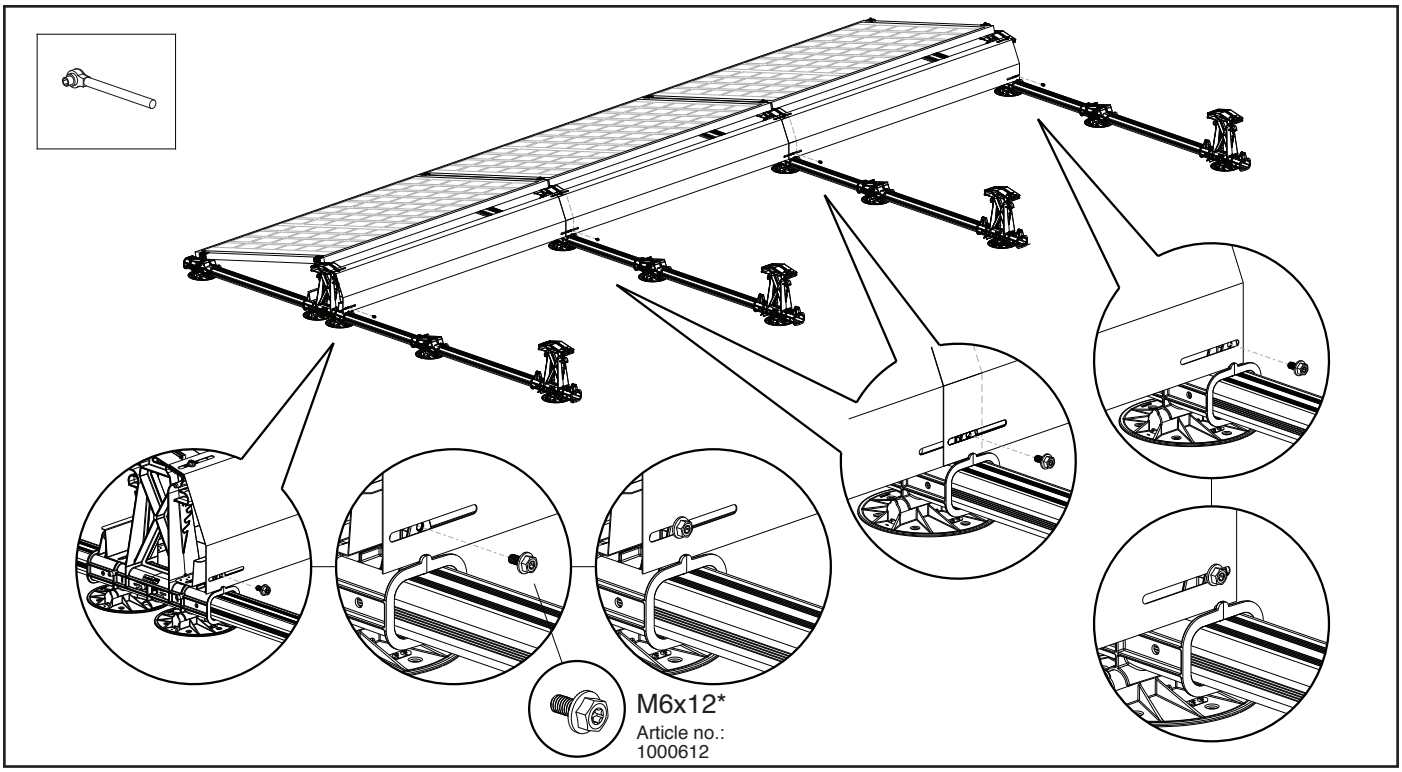

(VGHF WHVWHG DQG DSSURYHG WKH 0 [PHWULF VFUHZ IRU ¨[LQJ WKH

6.15 Equipotential bonding touchable metal parts (optional)

,I D FRPSOHWH HTXLSRWHQWLDO ERQGLQJ RI WRXFKDEOH PHWDO SDUWV SUR¨OHV E\ DSSO\LQJ WKH JURXQGLQJ EUDFNHWV 6HH VHFWLRQ IRU attached. The grounding brackets can only be effectively used if the bases are equipped with grounding springs and WKH VLGH GH©HFWRUV DUH ERQGHG ZLWK WKH VHOI WDSSLQJ VFUHZ VH

NOTE! The diagram in annex section 7.3.2 shows the positions of the grounding brackets in order to connect the wind GH©HFWRUV WR WKH UHVW RI WKH V\VWHP

3ODFH WKH JURXQGLQJ EUDFNHW RQ WKH EDVH SUR¨OH DQG RQ WKH ED EUDFNHW WR WKH EDVH SUR¨OH ZLWK D VHOI WDSSLQJ VKHHW PHWDO VFU
2. Place onemounting screw M6x12 LQ WKH KROH RI WKH JURXQGLQJ EUDFNHW DQG WKH screw this tight into the lowest assembly hole of the high base. **NOTE!** The maximum tightening torque of the screw connections is 2 Nm. Make sure that the mounting screws do not slip in the base. Refer to your tool manual to set it to the correct torque.

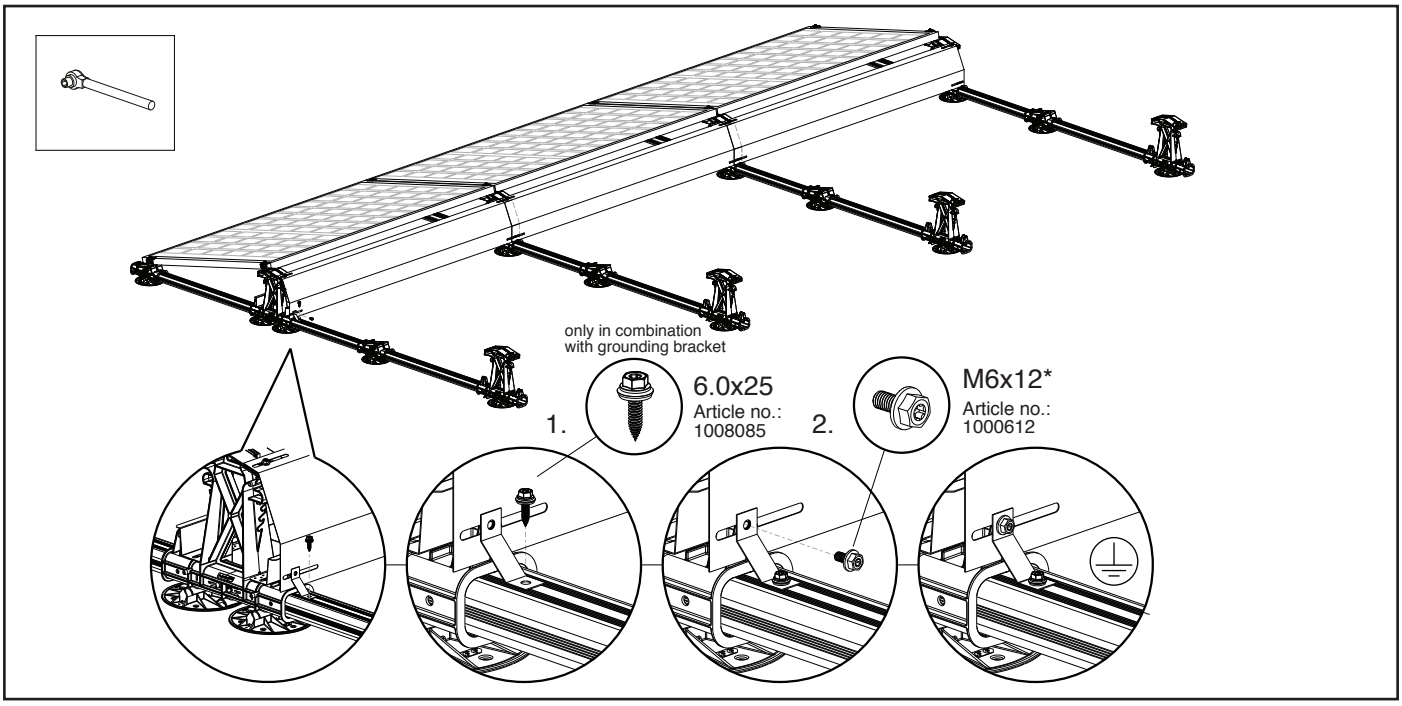

(VGHF WHVWHG DQG DSSURYHG WKH 0 [PHWULF VFUHZ IRU ¨[LQJ WKH

6.16 Mounting wind deflector left/right

3ODFH WKH OHIW ZLQG GH©HFWRU QH[W WR WKH OHIW VLGH RI WKH SDQH
NOTE! 7KH ©DQJH RI WKH ZLQG GH©HFWRU PXVW DOZD\V IDFH WKH SDQHO ¨
0RXQW WKH ZLQG GH©HFWRUV OHIW DQG ULJKW E\ SUHVVLQJ WKH VWD
EDVHV ,QVWDOO WKH ZLQG GH©HFWRU FDUHIXOO\ 0DNH VXUH WKDW DOO
EDVH 3UHVV WKH ZLQG GH©HFWRU ¨UPO\ DQG VWHDG\ RQ WKH SDQHO
¨[HG E\ WKH VHOI WDSSLQJ VKHHW PHWDO VFUHZ [PP 6: +(; 7 DU
DQG ORZ EDVHV ,I \RX ZDQW WR HDUWK WKLV RSWLRQDO \RX FDQ ¨[LW
QR 5XQ WKLV VFUHZ WKURXJK WKH ZLQG GH©HFWRU DQG WKH EDV
ORZHU VWDUORFN LQ WKH ZLQG GH©HFWRU DV D JXLGH 7KH FURVVZLQG
row of solar panels is now ready!

NOTE! ,I RSWLRQDO FDEOH H[LW JXLGHV DUH XVHG WKHQ FXW RXWV PXVW
IRU WKH LQVWDOODWLRQ RI ZLQG GH©HFWRUV DW FDEOH H[LW JXLGH

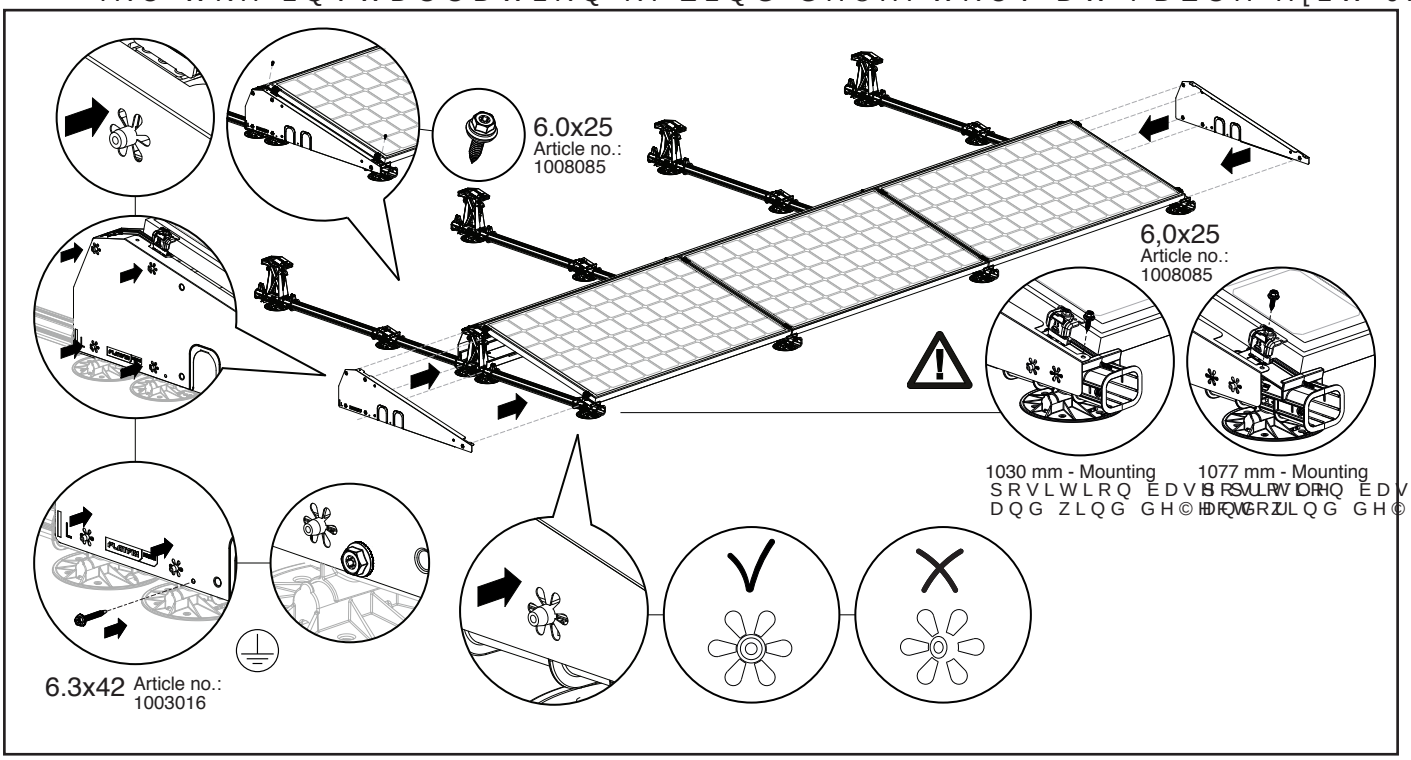

NOTE! ,I \RX DUH XVLQJ WKH PP EDVH SUR¨OH DUWLFOH QR RU W
SD\ DWWHQWLRQ WR KRZ \RX SRVLWLRQ WKH ZLQG GH©HFWRUV RQ
QR % RQ WKH EDVH SUR¨OH 8VH WKH DSSURSULDWH VWDUORFN
WDSSLQJ VKHHW PHWDO VFUHZ [PP 6: +(; 7 DUWLFOH QR

You can now mount the 2nd row of solar panels. To do this, follow the installation steps in sections 6.7 to 6.16.
7KH SDQHO ¨HOG LV QRZ UHDG\

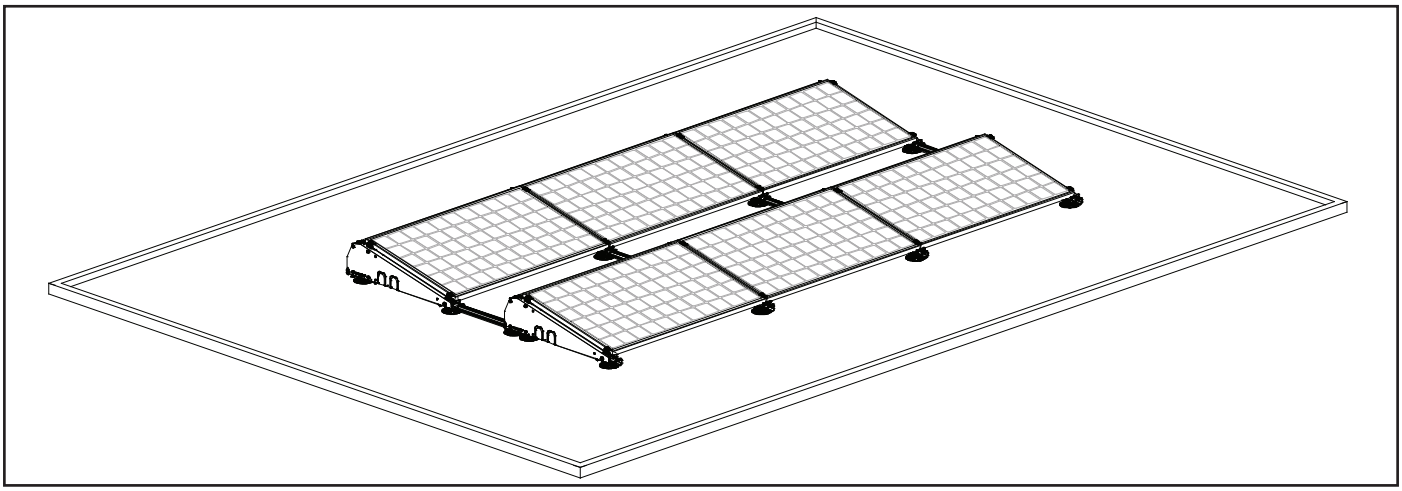

7. Annex

7.1 Dimensional variants

Frame thickness [mm]	End clamp		Mounting screw		
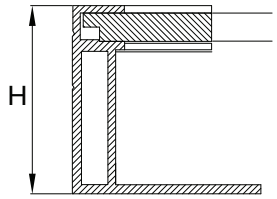	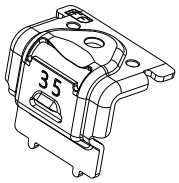		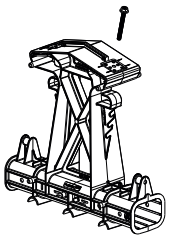	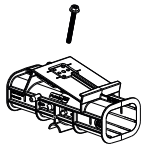	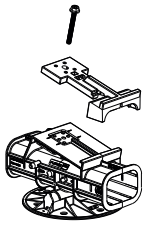
	Article number		Mounting screw - High base	Mounting screw - Low base	Mounting screw - Low base with extension
	Grey	Black			
30	1004330	1004430			
31	1004331	1004431			
32	1004332	1004432			P P %
33	1004333	1004433			
34	1004334	1004434			
35	1004335	1004435			
36	1004336	1004436	P P %	P P %	
37	1004337	1004437			
38	1004338	1004438			
39	1004339	1004439			
40	1004340	1004440			
41	1004341	1004441			P P %
42	1004342	1004442			
43	1004343	1004443			
44	1004344	1004444			
45	1004345	1004445			
46	1004346	1004446	P P %	P P %	
47	1004347	1004447			
48	1004348	1004448			
49	1004349	1004449			
50	1004350	1004450			n/a

$OO PRXQWLQJ VFUHZV DUH DYDLODEOH LQ EODFN % %

Row distance at base profile 940 mm (article no. 1007194 / 1007694)

Article number		Description	Row spacing single [mm]
Grey	Black		
1007137	1007637	% D V H S U R ¨ O H	P P 1320 *
1007155	1007655	% D V H S U R ¨ O H	P P 1500
1007175	1007675	% D V H S U R ¨ O H	P P 1700
1007194		% D V H S U R ¨ O H	P P 1890

** Standard length in the FlatFix Fusion calculator*

Row distance at base profile 940 mm (article no. 1007195)

Article number		Description	Row spacing single [mm]
Grey	Black		
1007137	1007637	% D V H S U R ¨ O H	P P 1410
1007155	1007655	% D V H S U R ¨ O H	P P 1590
1007175	1007675	% D V H S U R ¨ O H	P P 1790
1007194		% D V H S U R ¨ O H	P P 1980

Row distance at base profile 940 mm (article no. 1007196)

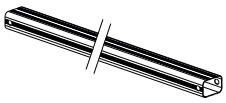

Article number		Description	Row spacing single [mm]
Grey	Black		
1007137	1007637	% D V H S U R ¨ O H	P P 1457
1007155	1007655	% D V H S U R ¨ O H	P P 1637
1007175	1007675	% D V H S U R ¨ O H	P P 1837
1007194		% D V H S U R ¨ O H	P P 2027

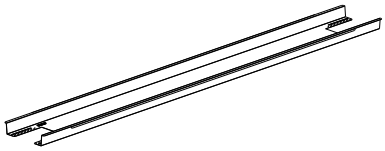

Article number	Description	Panel length [mm]	
		Min	Max
1007202	Ballast container 1600	1550	1690
1007210	Ballast container 1700	1655	1795
1007213	Ballast container 1900	1830	1970
1007086	Ballast container 2000	1940	2080
1007219	% D O O D V W F R Q W D L Q H	2050	2190

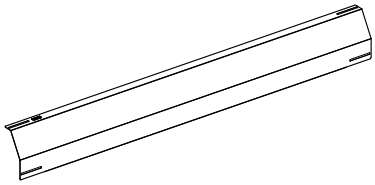

Article number		Description	Panel length [mm]	
Grey	Black		Min	Max
1007201	1007201-B	: L Q G G H © H F W R U E D	1550	1690
1007209	1007209-B	: L Q G G H © H F W R U E D	1655	1795
1007212	1007212-B	: L Q G G H © H F W R U E D	1830	1970
1007085	1007585-B	: L Q G G H © H F W R U E D	1940	2080
1007218	1007218-B	: L Q G G H © H F W R U E D F	2050	2190

7.2 Installing cable exit guides, cables and wind deflectors

7.2.1 Mounting cable exit guides (optional)

2SWLRQDO FDEOH H[LW JXLGHV VKRXOG EH SODFHG RQ WKH HLJKWK RUHOWD VR
RI D URZ 3ODFH FDEOH H[LW JXLGHV RQ WKH EDVH **NOTE!** Use cable ties
QRW VXSSOLHG E\ (VGHF %9 WR ¨[WKH FDEOHV DW WKH FDEOH H[LW JXL
NOTE! 8VH FDEOH WLHV WKDW DUH FRPSDWLEOH ZLWK WKH KROH VL]H RI W

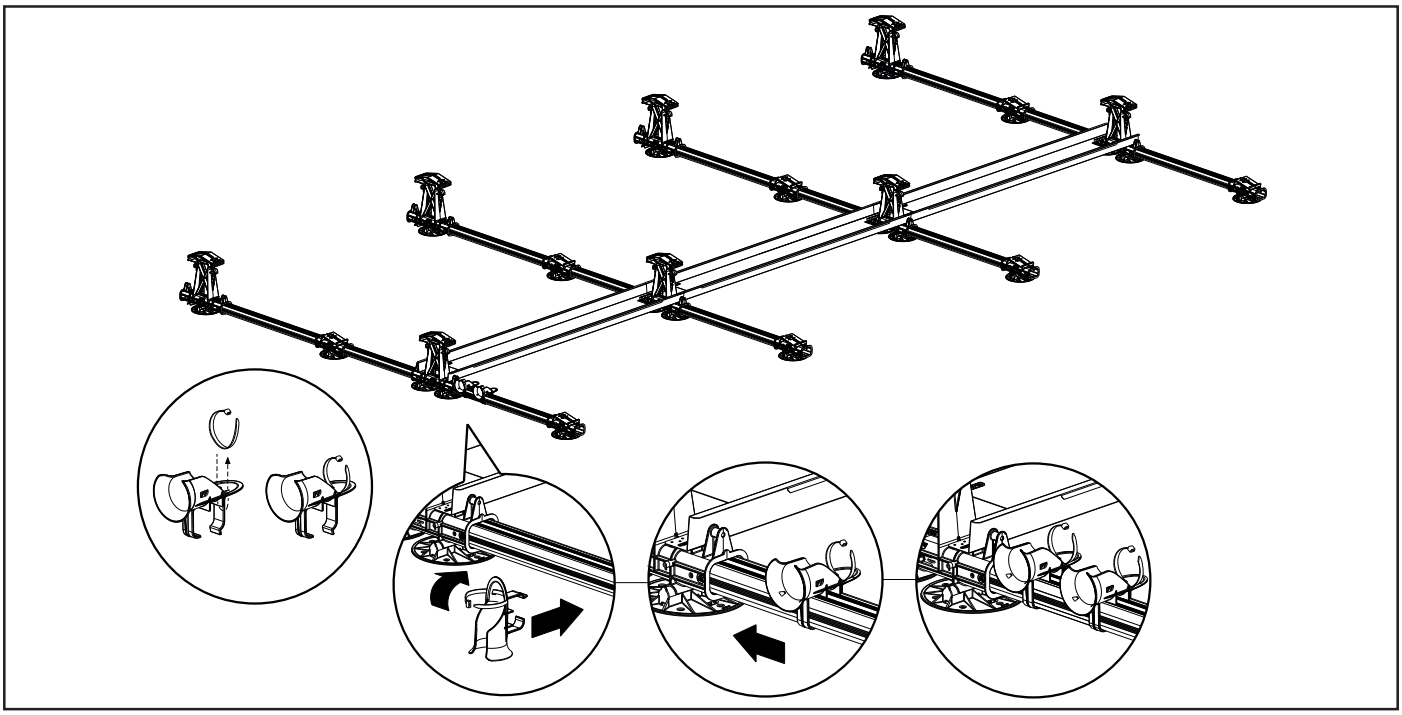

)HHG DOO FDEOHV DW WKH [LKWWJXLGH DQG DO Ocable exit guides. Secure the
cables in the cable exit guides using cable ties to prevent cable play.
2. Fix the cables to the top cable guide of the 2nd high base using cable ties. Repeat this step until the cables are attached to all high bases except the last high base.
Make sure that the length of cable that hangs loose is limited as much as possible.
NOTE! Make sure the cables are securely tied to prevent the cables from slipping.

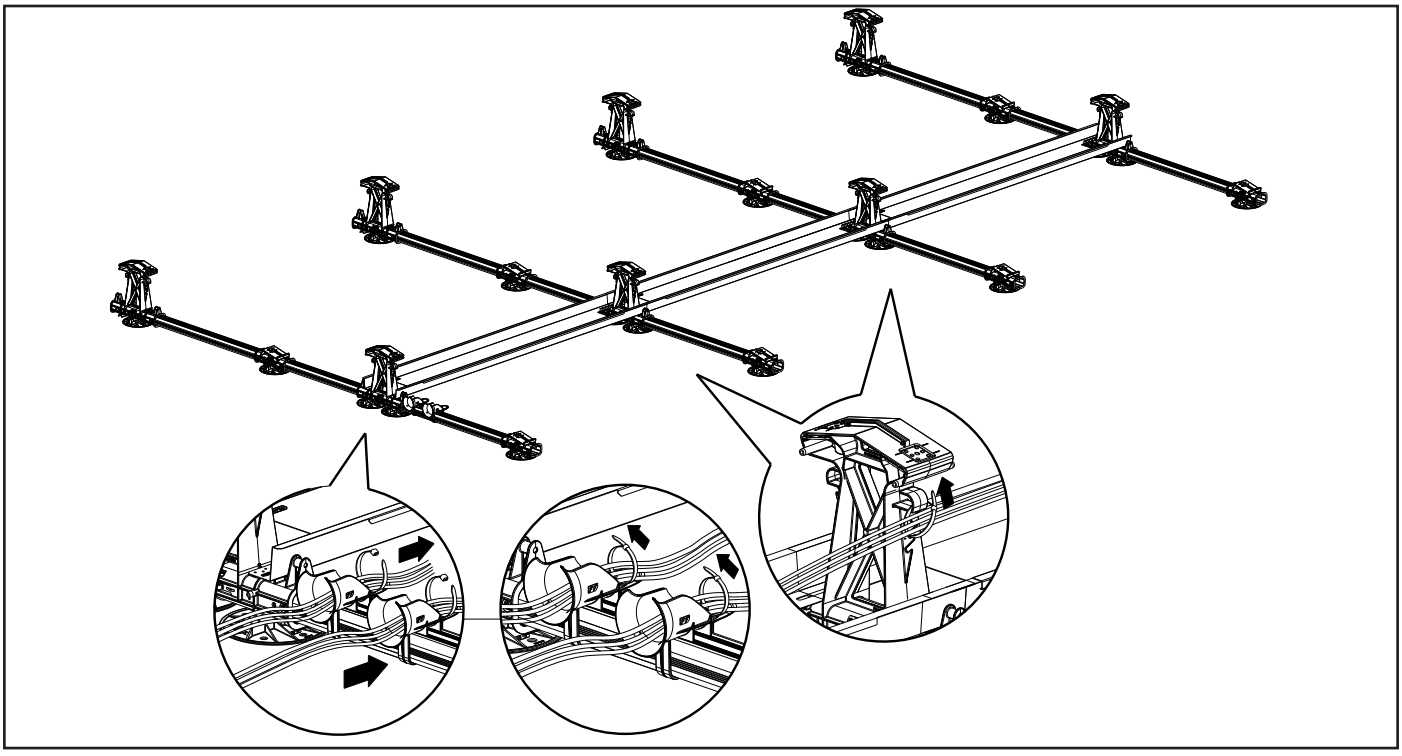

7.2.2 Mounting wind deflectors left/right

3ODFH WKH OHIW ZLQG GH©HFWRU QH[W WR WKH OHIW VLGH RI WKH SDQH
NOTE! 7KH ©DQJH RI WKH ZLQG GH©HFWRU PXVW DOZD\V IDFH WKH SDQHO ¨
On the side where the cable exit guides are located, break open the push-through plates on the underside of the wind
GH©HFWRU DQG RUW RXW WKH FXW RXWV ZKHUH QHFHVVDU\ 3ODFH WKH
FDEOH H[LW JXLGHV 0RXQW WKH ZLQG GH©HFWRUV OHIW DQG ULJKW E
FDWFKHV RI WKH EDVHV ,QVWDOO WKH ZLQG GH©HFWRU FDUHIXOO\ 0DNH
WKH FDWFK RI WKH EDVH 3UHVV WKH ZLQG GH©HFWRU ZL QJ GH©HFWRU RQ WKH FDWFKHV LPV
DGGLWLRQDOO\ ¨[HG E\ WKH VHOI WDSSLQJ VKHHW PHWDO VFUHZ [P
RI WKH KLJK DQG ORZ EDVHV ,I \RX ZDQW WR HDUWK WKLV RSWLRQDO
7 DUWLFOH QR 5XQ WKLV VFUHZ WKURXJK WKH ZLQG GH©HFWRU
WR WKH ORZHU VWDUORFN LQ WKH ZLQG GH©HFWRU DV D JXLGH 7KH FUR
¨UVW URZ RI VRODU SDQHOV LV QRZ UHDG\

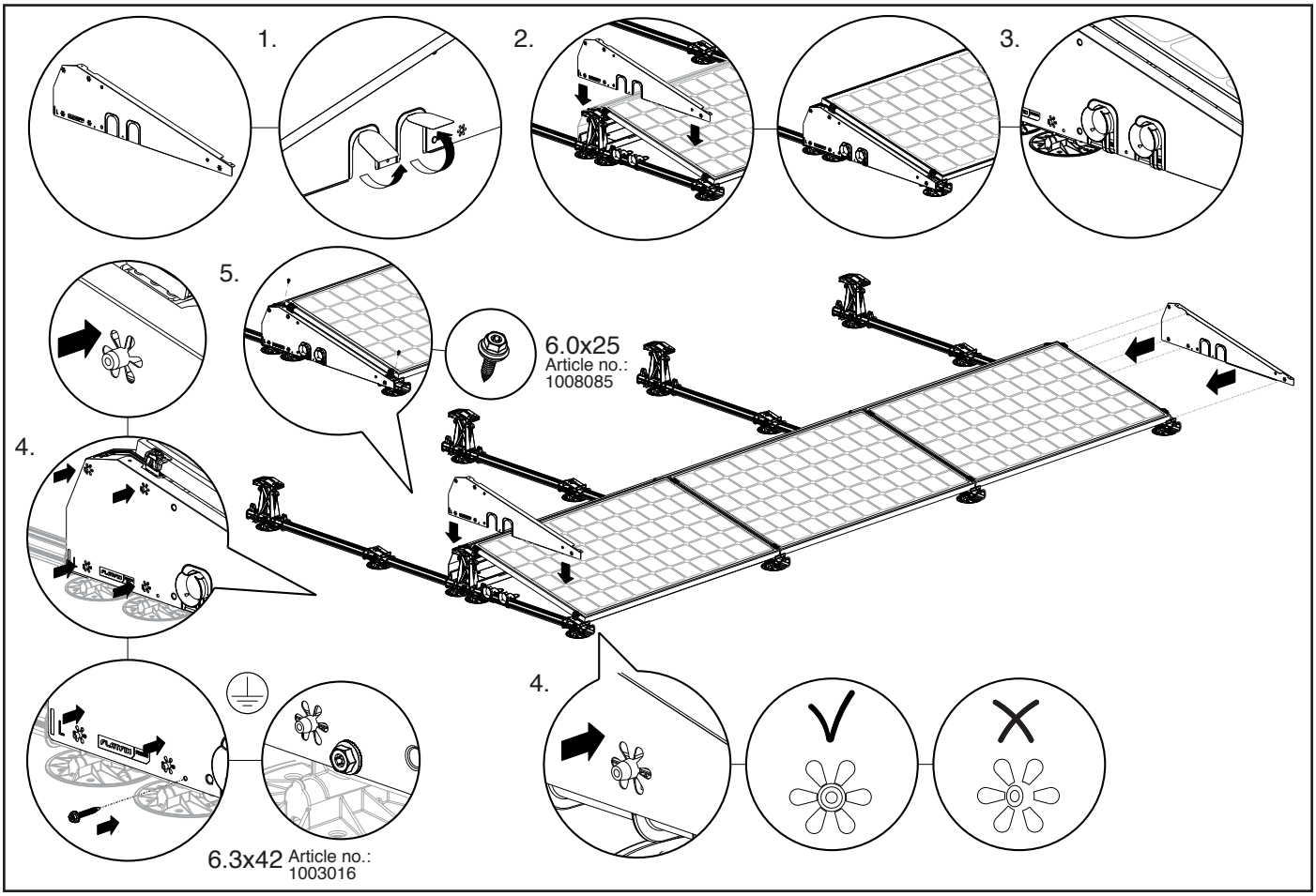

1RZ PRXQW WKH QH[W URZ RI VRODU SDQHOV 7KH SDQHO ¨HOG LV QRZ UH

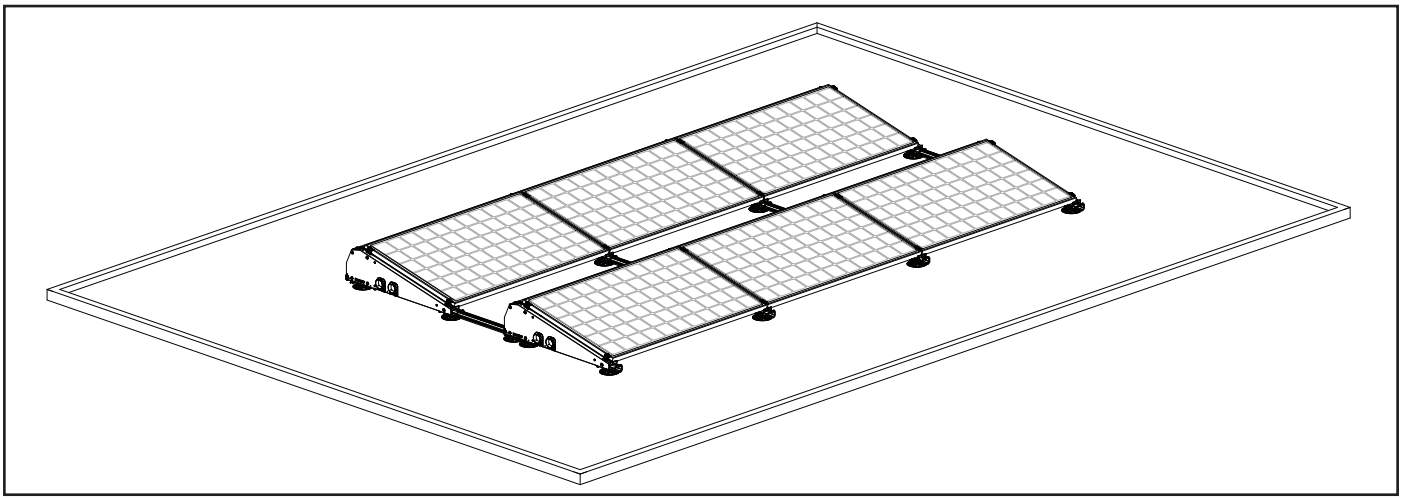

7.3 Schematic representation of earthing, equipotential bonding and lightning protection

7.3.1 Selection chart

LPS = lightning protection system
LPL = lightning protection level

URL QR CODE: https://eu.esdec.com/nl/advies-en-voorwaarden/

7.3.2 Equipotential bonding and earth rail

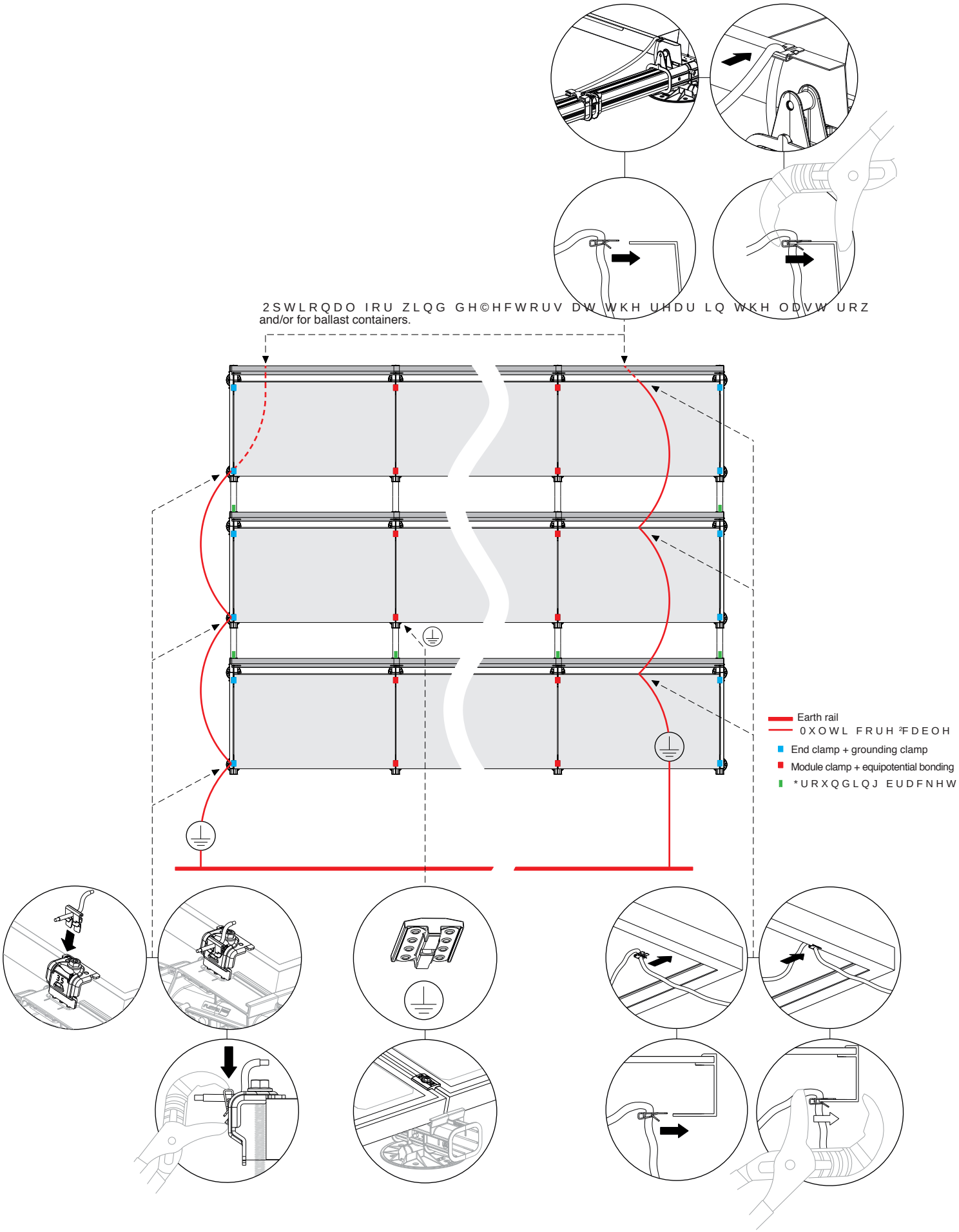

7.3.3 Lightning protection

Lightning protection guidelines.

CONSULT WITH YOUR LIGHTNING PROTECTION SPECIALIST TO ANALYSE YOUR PROJECT.

'HVLUHG DSSOLFDWLRQ $SSOLFDWLRQ RI OLJKWQLQJ GHWHFWLRQ V\VW

- 'HWHUPLQH WKH VDIH VHSDUDWLRQ GLVWDQFH 6 DFFRUGLQJ WR 1(1 (
- 7U\ WR REVHUYH WKH VHSDUDWLRQ GLVWDQFH EHWZHHQ WKH 39 V\VWH
- In this way, you can keep the PV system separate from the lightning protection system to prevent lightning current from entering.

2. If this is not possible, connect the PV system to LPS according to the applicable lightning protection level / 3 /

- See table 1, use at least 16 mm^2 connections.
- Check the need for additional overvoltage protection type 1 and/or type 2.
- Make sure that the cable support systems are also earthed and connected to LPS. NB: Metal cable support systems also belong to the PV system.
- Make sure that the earth cable is routed parallel to the DC cables.

IN EITHER CASE: CONSULT WITH YOUR LIGHTNING PROTECTION SPECIALIST BEFOREHAND TO ANALYSE YOUR PROJECT AND PREVENT UNWANTED SAFETY PROBLEMS. ESDEC IS LIABLE UNDER NO CIRCUMSTANCES FOR THE APPLICATION AND/OR COMBINATION OF THE LIGHTNING PROTECTION ON THE ROOF. CONSULT WITH YOUR SPECIALIST AND ENSURE SAFE INSTALLATION ACCORDING TO NEN-EN-IEC 1(1 135 SDUW VHFWLRQ

table 1

Mesh size	LPL level	Connect the PV system to the ..
5 x 5 metres	I	5 metres
10 x 10 metres	II	10 metres
15 x 15 metres	III	15 metres
20 x 20 metres	IV	20 metres

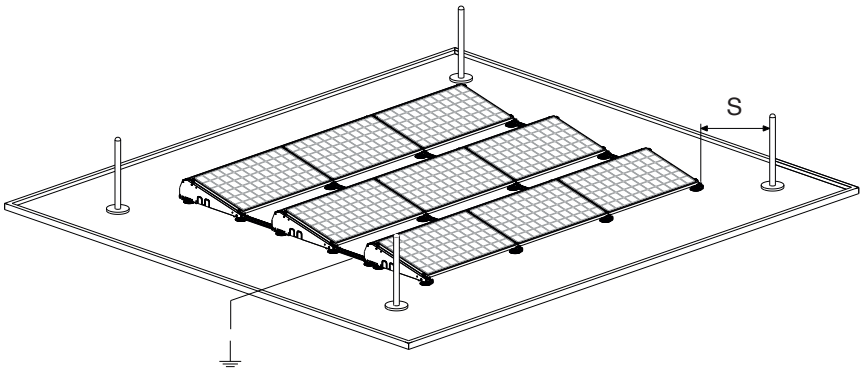

LPS = lightning protection system
LPL = lightning protection level

7.4 Ballast configurations

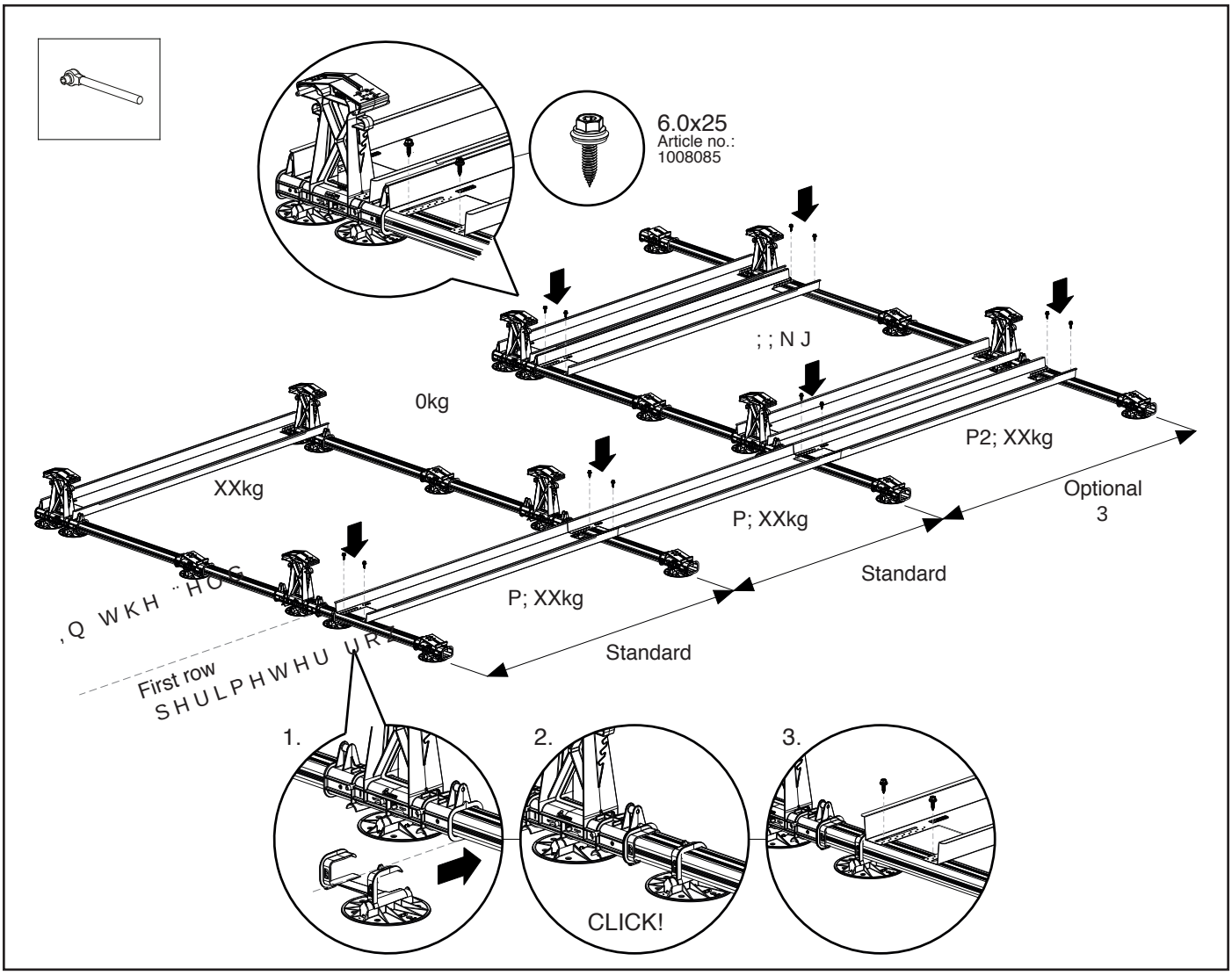

Ballast under the panel

If the calculator prescribes situations ‘P’ or ‘P2’, an extra roof support with roof support adapter must be mounted on WKH EDVH SUR¨OH XQGHU WKH SDQHO 3RVLWLRQ WKH DGDSWHU 7KH WKDV DGDSWHU DOVR VHUYHV DV D VSDFHU 7KH EDOODVW ER[HV DOVR KDYH D EXLOW LQ EHDW VFUHZ SUR¨OHV ZLWK WKH VHOI WDSSLQJ VKHHW PHWDO VFUHZ [PP 6: +(the pre-punched holes in the ballast box. Where two ballast boxes located next to each other overlap, one screw is VXI¨FLHQW

** in the 2; XXkg situation it is not mandatory to use extra roof supports and adapters. The 2nd ballast box can be SODFHG KHUH DJDLQVW WKH KLJK EDVH EHIRUH VFUHZLQJ LW RQWR WKH a distance of 135mm.

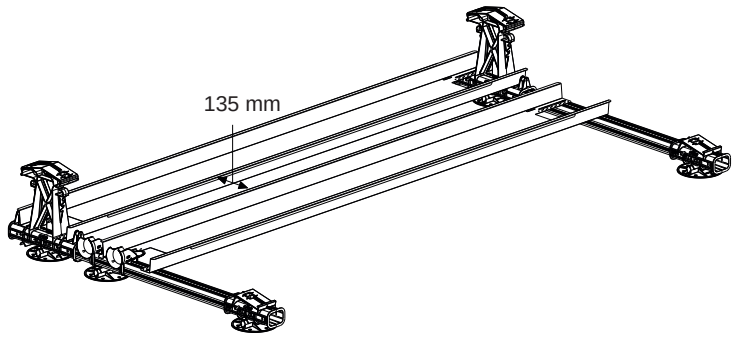

7.4 Ballast configurations (contd.)

Single setup - 1/2

SEGMENT PLAN	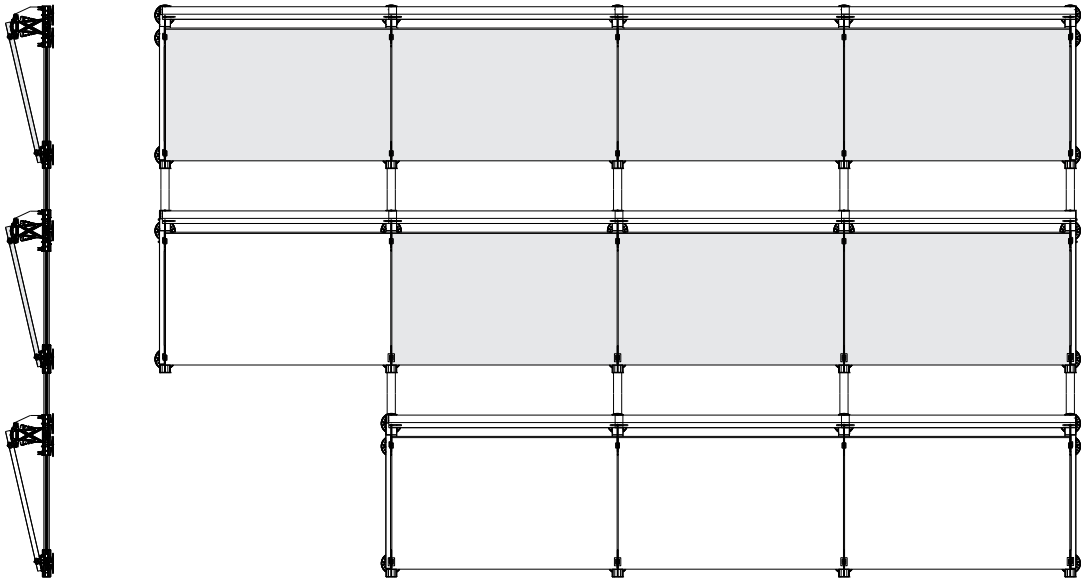		
BALLAST POSITIONS			
NAME	no ballast	XXkg	2; XXkg
DESCRIPTION	1R EDOODVW UHTXŁUHG ZHLJKW GLVWUL bution from adjacent positions and RZQ ZHLJKW	Standard 'in the segment' ballast position	2nd ballast position added due to higher ballast requirements for positions 'in the segment'
FIX / ALIGN		Place ballast container on the high bases, and align them using the VORWV KROGHU DQG	Position the 2nd ballast container directly against the high bases
WEIGHT DISTRIB.	No ballast required	6SHFL¨HG TXDQWLW\ RI EDOODVW LQ ballast container 1	Fill ballast container 1 to the maximum level with ballast and place the remainder of the spec- L¨HG DPRXQW RI EDOODV FRQWDLQHU GR QRW

Note: For positions 'in the segment' no additional roof supports and roof support adapters are required for the placement of the 2nd EDOODVW FRQWDLQHU RSWLRQDO